JUNE 1957 • 30 CENTS

Consumer BULLETIN

Published by
Consumers' Research, Inc.
Washington, New Jersey

CAMERAS 6

35 mm. and twin-lens reflex cameras 6

Now color slides for everyone 14

House trailers—ratings of 23 makes 10

Record players at popular prices 16

Light colored paint for cooler homes 24

COMPLETE CONTENTS ON PAGE 5

Dangers from swimming pool pumps

ON A SUMMER AFTERNOON a few years ago, an 18-year-old girl climbed from a swimming pool and reached for a microphone at the side of the pool. She had intended to speak to her friends over the pool-side loud-speaker system, but the only sound that came from her lips was a scream. She collapsed and died from the electric shock she received when she picked up the microphone (which was presumably part of a pool-side record-player system).

An electric pump to circulate and filter the water in a swimming pool may present a similar hazard. Electricity and water together in the vicinity of a human being can be death-dealing. The special danger from electricity arises from the fact that people about a pool lack the protection of insulating values normally offered by dry shoes and clothing. They usually have their feet bare, and will be walking or sitting on concrete or soil which is damp or wet. (Television and radio receivers and record players may present a great danger, too, in the circumstances described.)

With the advent of hot weather, many children will be splashing joyfully in their own back yard swimming pools, and some of these pools will have electric pumps for filtering the water or for "vacuum cleaning" the interior walls and bottom. The great majority of home swimming pools in use are of the inflatable or semirigid plastic kind which vary in size from 3 feet in diameter to as large as 20 feet in diameter.

One of the most important considerations in the use of a "portable" swimming pool is maintaining the water in the pool in clean, clear condition. It is a simple matter to drain the smaller pools, which hold comparatively little water, and then refill them each day, if the cost of the fresh water is not important. However, on the larger pools of 16 to 20 feet in diameter, which may hold as much as 7000 gallons of water, it becomes impracticable to drain and refill daily. Cost alone would be prohibitive usually, where city water is to be used. Nevertheless, with many children and even adults entering and using the pool, and with the normal accumulation of leaves, dirt, and dust, the water is bound to become somewhat contaminated and stale.

Nowadays it is fairly common to use an electric water pump and a vacuum cleaner-hose arrangement to clean a pool. In some cases the system may include a filter to remove particles of dirt and organic material. Within certain limits, a chemical additive such as calcium hypochlorite (a chlorine carrier) will keep the water clean in appearance and bacteriologically safe. Nevertheless, slime and algae will form on the submerged surfaces of an unfiltered pool when water is allowed to stand for an extended period of time.

With an electrically driven pump located at the pool side, there may be a dangerous shock hazard, especially if the pump unit is homemade, or if the motor used is not fully enclosed and

(*Continued on page 27*)

The Consumers' Observation Post

TODAY'S TEENAGER needs more high-quality protein in his diet. Dr. Joseph A. Johnston, chief pediatrician at Henry Ford Hospital, Detroit, Mich., recommends that the National Research Council's allowance for adolescents be revised upward. He reported at a conference on protein nutrition that studies of 1100 children had demonstrated a clear relationship between reaction of tuberculosis and diet, and that the adolescent susceptible to tuberculosis particularly needs greater amounts of high-quality protein than what is at present regarded as adequate. He suggested that protein should make up at least 15 percent of an adequate calorie intake for teenagers.

* * *

SUNGLASSES should not be worn indoors. Navy physicians have pointed out, according to Science News Letter, that most indoor working conditions and homes have illumination levels so low that the normal eye needs all available light for comfortable seeing.

* * *

FASHION is something that is new today and gone tomorrow. It undoubtedly has its place, but not in a china department. That is the view of Don Baines, columnist for Retailing Daily (now Home Furnishings Daily), who points out that there was a time when the customer could start purchasing a good set in a pattern that could be added to later. By simply asking the clerk, consumers could learn whether the set was offered in open stock, guaranteed to be available for years. Mr. Baines laments the fact that the term is now meaningless and that an "open-stock" set now lasts anywhere from six months to two years, with only a few manufacturers offering open-stock patterns for as long as 20 years. The bride-to-be who is making a selection of good china will wish to bear this situation in mind.

* * *

SAFEGUARDING THE WATER SUPPLY of communities throughout the United States may be considered a proper governmental function. Whether it is right and proper for public officials to go further and promote the addition to drinking water of a chemical that has a limited therapeutic action, with or without the consent of a majority of the local citizenry, is a question that has stirred up widespread controversy in the last two or three years. Under the leadership of the United States Public Health Service, organizations and individuals in the field of public health have taken to beating the propaganda drums for universal fluoridation of community water supplies so vigorously that it has been difficult to obtain a hearing or a forum for the views of those who oppose fluoridation, view it with caution, or who simply hold that the merits and safety of the treatment are not yet fully established. At a lengthy hearing early this year in New York City, the opponents were for once accorded a respectful hearing along with the proponents. For the first time, the opponents of compulsory consumption of fluorides had an opportunity to spread on the record an impressive array of testimony regarding the shortcomings, dangers, and drawbacks involved in fluoridation. Now comes a book entitled "The American Fluoridation Experiment," by F. B. Exner, M.D., and G. L. Waldbott, M.D., edited by James Rorty (The Devin-Adair Company, 23 E. 26 St., New York 10, $3.75), that marshals evidence for the opposition in one convenient volume, citing and discussing a substantial number of studies which indicate disadvantages and potential dangers from the intake of fluorides daily for many years. In the face of this impressive array of data and skilled interpretations, it will be increasingly difficult for the fluoridation propagandists to dismiss opponents as cranks and crackpots.

PEANUT BUTTER that is free from hydrogenated peanut oil is difficult to find. The practice of hydrogenating the oil in nationally distributed brands gives the product longer shelf-life and prevents the oil from separating out and collecting at the top of the jar. In the light of current research indicating that hydrogenated fats are undesirable, there will undoubtedly be greater interest in finding some local brand that is freshly ground. The oil that separates from the butter can often be dispersed by turning the jar upside down on the pantry shelf at intervals. Manufacturers of food blenders usually furnish recipes for making peanut butter at home with roasted peanuts, sometimes with the addition of a little vegetable oil.

* * *

HOMEOWNERS trying to cultivate a new lawn often look for some "miracle" strain of grass that will grow quickly and abundantly. Before investing in plugs of Meyer Zoysia (for which overenthusiastic claims have been made), they will do well to send 10 cents to the National Better Business Bureau, Chrysler Building, New York 17, N. Y., for a report on this strain. It does have some advantages in that it grows in nearly every type of soil and is resistant to many diseases, insect attack, heat, and drought; but it loses its green color after the first or second killing frost, spreads slowly, and is likely to prove unsatisfactory in the shade for the northern areas. It is not propagated by seed like many other grasses.

* * *

FLEAS, MOSQUITOES, CHIGGERS, and other biting insects can be kept away from their human targets by the use of a new compound described by the United States Department of Agriculture as "the best all-purpose insect repellent so far developed." It is based on the use of N,N-diethyl toluamide applied to the skin in full strength, which repels most kinds of mosquitoes for three to eight hours, according to tests made in Panama, Alaska, and in several states. When it is applied to clothing, it provides protection against chiggers, ticks, and fleas for several days. The new product should be currently available under the name of "Off," a colorless liquid produced by S. C. Johnson, Racine, Wis., that sells for 75 cents for a 1-1/2-ounce bottle. Something similar is available in both stick and liquid form under the name of "6-12" (2-ethylhexanediol-1-3), put out by Union Carbide at 59 cents for a 2-ounce 100 percent solution. Since the new repellent resists being rubbed off, it ought to be a great boon to hikers, hunters, and fishermen.

* * *

THE QUALITY OF ALUMINUM FURNITURE has suffered serious deterioration. According to Retailing Daily (now Home Furnishings Daily), the aluminum is of too light gauge, the tubing is not large enough in diameter, and the webbing is hardly strong enough to support a person of over 140 pounds. Dimensions are smaller, and buffing of corners is omitted, leaving rough edges. In general, the charge is made that quality has been sacrificed in order to cut prices. One irate manufacturer, however, has taken a page advertisement to assert that, with the exception of two promotional numbers, his factory is still turning out web-aluminum furniture of the same high quality that has prevailed in the past three years. He reports that some of his products are still in good condition despite the fact that they have been left out-of-doors for five or six years.

* * *

HOW SOON WILL LICENSE TAXES ON AUTOMOBILES graduated according to horsepower make an appearance on the legislative scene? A proposal that the next Kentucky legislature take such action has been made by Don Sturgill, acting safety director of Kentucky, according to Automotive News. The suggested scale would run from 15 cents per horsepower on cars of 201-250 horsepower up to $2.50 per horsepower for cars of 350 horsepower or more. The avowed aim of this bill is not to raise revenue, but to influence car owners to demand that manufacturers reduce horsepower as a safety measure.

(The continuation of this section is on page 31)

PUBLISHED BY CONSUMERS' RESEARCH, INC., WASHINGTON, NEW JERSEY VOL. 39, NO. 6 JUNE 1957

Consumers' Research is a non-profit institution. It is organized and operates as a scientific, technical, and educational service for consumers. It has no connections with business or advertising; its support comes solely from the consumers who read Consumers' Research Bulletins.
Scientific and technical staff, editors, and associates: F. J. Schlink, R. Joyce, D. C. Aten, M. C. Phillips, Erma A. Hinek, F. X. Hinek, Lloyd Charlton, Donald M. Berk, and A. R. Greenleaf. Editorial Assistants: Mary F. Roberts, B. Beam, and Ellen J. Snyder. Business Manager: C. D. Cornish.

Consumer BULLETIN

THE MAGAZINE THAT GUIDES CONSUMER BUYING

OFF THE EDITOR'S CHEST

THE CONSUMER is the person whose buying reflexes make wheels of industry revolve and cash registers jingle merrily, or who turns economic forecasters into prophets of gloom, when he is in a negative mood. In the United States, the effect of consumers' purchasing habits and impulses on the economic system has become so far reaching that there is a whole school of investigators working at what is called "motivational research," more simply characterized as an attempt to find out *why* the American consumer behaves as he does in particular instances.

The importance of pleasing consumers with a variety of attractive products at moderate prices in order to promote the economic well-being of a nation has impressed itself on the business and governmental leaders of half a dozen countries abroad. An increasing number of economic and trade missions have toured the United States in the last few years to secure first-hand information about American production and marketing methods in order to serve the needs of consumers in their own countries more effectively.

Until recently, the greater number of inquiries and visits to Consumers' Research over nearly three decades have come from interested people in Great Britain who would like to see a similar testing and product-rating organization operating in their country. In Great Britain and other countries in Europe, the special character of the libel laws has

(*Continued on page 28*)

What's in this issue

Dangers from swimming pool pumps ... 2

Some new photographic equipment ... 6
35 mm. cameras, Twin-lens reflex cameras, Slide projectors for 2 x 2 in. slides (35 mm. transparencies)

Cost of operating a car ... 9

House trailers ... 10
Floor, side wall, and roof construction, insulation, financial arrangements in buying a trailer, and listings of 23 makes of trailers

Now color slides for everyone ... 14
New low-priced cameras and fast film make it easy

Booklet on electrical shock hazard ... 15

Record players ... 16

New kind of cigarette lighter ... 19

Screw drivers ... 20

An inexpensive air compressor ... 23

Light colored paint for cooler homes ... 24

Map reading aids for motorists ... 26

FEATURES

The Consumers' Observation Post ... 3

Off the editor's chest—Aiding consumers abroad ... 5

Ratings of Motion Pictures ... 29

Phonograph Records—*Walter F. Grueninger* ... 35

Cumulative Index (Jan. through June) ... 33

Consumer Bulletin is issued monthly by Consumers' Research, Inc., at Washington, N. J. Copyright, 1957, by Consumers' Research, Inc., Washington, N. J.; all rights reserved. Subscription price (12 issues), $4 per year, U.S.A. (Canada and foreign, $4.20). Single copy, 40c. For libraries, schools, and colleges, a special subscription of nine monthly Bulletins (October-June, inclusive) is available at $3; Canada and foreign, $3.20.

When changing address, give the old address as well as the new, with postal zone number if any. Allow five weeks for the change to become effective.
Entered as second-class matter, November 9, 1934, at the Post Office at Washington, N. J., under the Act of March 3, 1879; additional entry at Easton, Pa.
Printed in U.S.A.

¶ Responsibility for all specific statements of fact or opinion at any time made by Consumers' Research lies wholly with the technical director and staff of the organization.

Note: Use of any of the material in this Bulletin for any sales or advertising purpose is not permitted. Application for permission to reprint for other purposes should be made by letter.

Listings usually are arranged in alphabetical order by brand name (not in order of merit) under each quality or performance rating. A numeral 1, 2, or 3 at the end of a listing indicates relative price, 1 being low, 3 high. Where the 1, 2, 3 price ratings are given, brands in the 1, or least expensive group, are listed alphabetically, followed by brands in price group 2, also in alphabetical order, etc. A quality judgment is wholly independent of price.

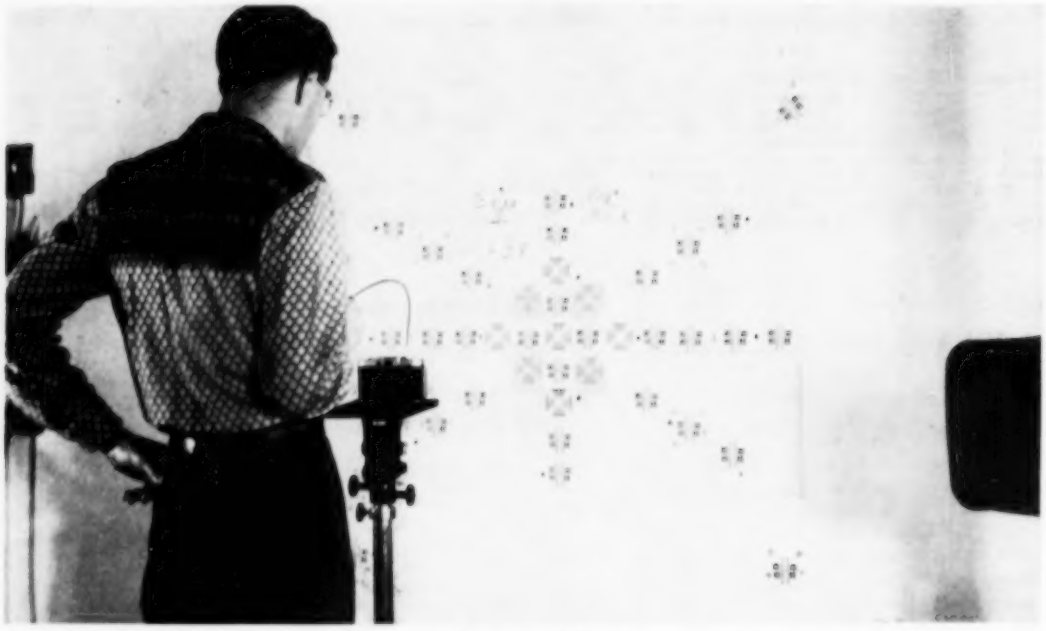

Testing lens resolution.

Some new photographic equipment

INTEREST IN CAMERAS, particularly 35 mm. and twin-lens reflex, continues at a high level, and while there have been no startling developments in the design of these popular cameras, there are numerous new models with features providing for greater convenience and versatility. These attracted much interest at the big photographic shows recently held in New York City and Washington, D.C.

Competition among the various makes is very keen, and the low priced but good quality Japanese cameras are being well received by the American public. There are so many different makes and models available (over one hundred 35 mm. and about 40 twin-lens reflex, ranging in price from about $25 to about $450) that the amateur photographer has a difficult time making a wise choice. The listings that follow will help him with the problem of choosing among some of the newest and most widely advertised offerings.

35 mm. cameras

A. Recommended

Ansco Super Memar f2 (Ansco, Binghamton, N.Y.) $119.50. Case, $7. Made in Germany. *Agfa Solagon* coated *f*/2 lens of 50 mm. focal length. *Syncro Compur LVS* shutter with rated speeds of 1/500 to 1 sec. and bulb. M-X synchronization. Delayed-action release (self-timer). Has double-exposure prevention device. Shoe was provided for attachment of flash gun or other accessory. Coupled range-finder of superimposed-image type with single window for view-finder and range-finder. Focusing from 3.5 ft. to infinity by a lever which rotates a ring of the lens mount. Click stops for shutter speeds (a good feature). Shutter speed and stop opening are so coupled that, when correct exposure has been determined, changing to a different shutter speed changes the aperture, too, to the correct value. The camera is adapted for use with exposure meters calibrated in the light value system; the light value number is set on a red scale opposite a red dot. When this is done, a given shutter

speed will provide for the correct setting of lens aperture (stop settings). Film is advanced and shutter cocked by single stroke of a lever. Film rewind knob had a scale which could be set to register the A.S.A. speed of black-and-white film or the type of color film with which the camera was loaded. Quality of lens was very good (one of the best tested by CR); lens resolved 56 lines per mm. at center, 40 to 56 lines per mm. at edges, at full aperture. Shutter speeds were approximately 35% slow at 1 sec. and 1/500 sec. (outside the accepted limit of error). (Other speeds were within the permitted tolerance.) A neat, finely-finished, well-made camera.

Argus C-44 (Argus Cameras, Inc., Ann Arbor, Mich.) $117 with case and BC flash gun. *Argus Cintagon* coated *f*/2.8 lens of 50 mm. focal length. Interchangeable lenses, on bayonet mounts. (A 35 mm. wide-angle lens and a 100 mm. telephoto lens are available at $56.50 and $59.50, respectively.) Behind-the-lens shutter with rated speeds of 1/10 to 1/300 sec. and bulb. M-X synchronization. Click stops on aperture (diaphragm) control. Double-exposure prevention. Advancing film cocks the shutter. Coupled range-finder of superimposed-image type with single window for view-finder and range-finder. Focusing from 3 ft. to infinity by turning toothed wheel at top of camera. Quality of lens was good; lens resolved 48 to 56 lines per mm. at center, 28 to 40 lines per mm. at edges, at full aperture. Shutter speeds were within permitted tolerances, except 1/300 sec. which was 50% slow.

Konica III (Konica Camera Co., 76 W. Chelten Ave., Philadelphia 44) $119.75. Case, $12.50. Made in Japan. *Hexanon f*/2 lens of 48 mm. focal length. *Konirapid* shutter with rated speeds of 1/500 to 1 sec. and bulb. M-F-X synchronization. Delayed-action release (self-timer). Click stops for both shutter speeds and aperture, and a double-exposure device. A shoe was provided for attachment of flash gun or other accessory. Coupled range-finder of superimposed-image type with single window for view-finder and range-finder. Focusing from 3 ft. to infinity by a lever which rotates a ring of the lens mount. The view-finder outlines the picture area with a white frame. The exposure counter returns to "start" automatically when the back of the camera is opened. Film is advanced and the shutter cocked by two strokes of a lever. The lens was very good; it resolved 56 lines per mm. at center, 40 lines per mm. at edges, at full aperture on Plus X film. On one sample, shutter speeds exceeded permitted tolerances at 1/500, 1/100, 1/50, 1/10, and 1 sec. On a second sample, shutter speeds exceeded tolerances at 1/100 and 1 sec. A very well-made and well-finished camera.

Konica III (new model) (Konica Camera Co.) $119.75. Case, $12.50. Similar to *Konica III* listed above, except that the new model was equipped with *Seikosha-MXL* shutter in which shutter speed and stop opening are coupled so that, when the correct exposure has been determined, changing to a different shutter speed changes the aperture, too, to the correct value. The new *Konica III* also has a rectangular-shaped range-finder eyepiece instead of the round eyepiece used on the older model. Quality of *Hexanon f*/2 lens, very good, and about the same as that of the model above. Shutter speeds exceeded permitted tolerance at 1/250 and 1/500.

Twin-lens reflex cameras

B. Intermediate

Kalloflex Automat K 2 (Kowa Optical Corp., 260 Fifth Ave., N.Y.C.) $119.50. Made in Japan. *Prominar* coated *f*/3.5 taking lens and *Prominar f*/3 viewing lens of 75 mm. focal length. *Seikosha* shutter with rated speeds of 1/500 to 1 sec. and bulb. Built-in F-M-X synchronization. Waist-level focusing on convex ground-glass screen with built-in magnifier. Also had eye-level view-finder, but in using this, one does not have access to the focusing screen. Semiautomatic film positioning. Film advanced by lever which automatically cocks the shutter. Double-exposure prevention, with provision for making intentional double exposures. Camera had safety lock on release button to prevent accidental exposure. Focusing from 3 ft. to infinity by knob at the side of the camera. Camera was not corrected for parallax (as *Rolleicord* and *Rolleiflex* are). A shoe is provided on the side of the camera for mounting flash gun or other accessory. Lens mount is designed for bayonet accessories. Quality of lens was good; lens resolved 40 to 56 lines per mm. at center, 28 to 40 lines per mm. at edges, at full aperture. *Note*:

Ansco Super Memar 12

Argus C-44

Konica III

Kalloflex Automat K 2

Yashica A

Advertising claims 125 lines per mm. This may mislead some who read the advertising, as the figure is obtained by the projection method on the lens only and does not take into account the resolution of the film. The combined resolution of lens and film as measured by Consumers' Research is the resolution that is important to the user, and that gives a figure considerably less than the resolution of the lens alone as measured by the projection method used by the manufacturer of this camera. If the advertised 125 lines per mm. is actually achieved, it would apply to the center of the field, not to the whole picture area. Shutter speeds were within permitted tolerances. As is the case with a good many cameras of Japanese manufacture, the shutter mechanism was not well protected against entrance of dirt, sand, or dust.

Yashica A (Yashima Optical Ind. Co., Ltd., 329 Fifth Ave., N.Y.C.) $29.95. Case, $6. Made in Japan. *Yashimar* coated *f*/3.5, 80 mm. focal length, taking and viewing lenses. *Copal* shutter, not cocked by film advance as in many other cameras, with rated speeds of 1/25 to 1/300 sec. and bulb. Built-in "X" synchronization. Waist-level focusing on ground glass; built-in magnifier. Camera also had eye-level viewfinder, but in using this, one does not have access to the focusing screen. Focusing from 3.3 ft. to infinity by turning knob on the side of the camera. Like *Kalloflex*, not corrected for parallax. Film is advanced by turning knob on the side of camera and locating exposure number in red window. Film-advance knob had a scale which could be set to indicate the A.S.A. speed of the film with which the camera was loaded. A shoe is provided on the side of the camera for mounting flash gun or other accessory. Quality of lens was fair; lens resolved 40 to 48 lines per mm. at center, 14 lines per mm. at edge, at full aperture. Shutter speeds were approximately 35% fast at 1/25 and 1/50 sec. (other speeds within A.S.A. tolerance). As with *Kalloflex*, shutter mechanism was not well protected against entrance of dirt.

Slide projectors for 2 x 2 in. slides (35 mm. transparencies)

Automatic

C. Not Recommended

Graflex Constellation (Graflex, Inc., Rochester, N.Y.) $89.75 with *Airequipt Model P* automatic slide changer, remote control, and one slide tray. Slide timer, $10 extra. Case, $9.95 extra. Capacity, 36 cardboard-mounted slides. (The projector will not accept regular glass- or metal-mounted slides.) Automatic timer can be set for 5, 8, 12, 15, 20, or 30 sec. intervals. Coated *f*/3.3 anastigmat lens of 4-in. focal length, focused by rotation of lens in helical mount. 500-watt lamp, blower cooled. The double condensers and heat filter were easily removed for cleaning. Shutter in changer closes while slides are being changed. Toggle switch turns on fan, then lamp; this desirable arrangement prevents projector from being used without the fan in operation. For semiautomatic operation, pressing a bar key at rear of projector or a button at the end of the remote control cable changes slides. There was no provision for reversing, or for showing single slides. Lack of a reversing feature means that a slide cannot be brought back for projection without removing the changer tray, reinserting, and advancing manually or automatically to the slide required. Light output, about average for a 500-watt projector. Evenness of illumination, fair. Projector is not well baffled against light leaks. Resolution of lens, fair, except at one corner where resolution fell off to 14 lines per mm. Temperature of slide, 180°F (somewhat high). Changing mechanism did not operate satisfactorily; the motor did not appear to have enough power to move some slides, and required manual assistance. There was a slight masking of corners of "Super Slides" (see under *Powermatic*). The projector satisfactorily passed the usual tests for electrical safety.

Powermatic (Viewlex, Inc., Long Island City, N.Y.) $119.50 with case and six plastic slide trays. Remote

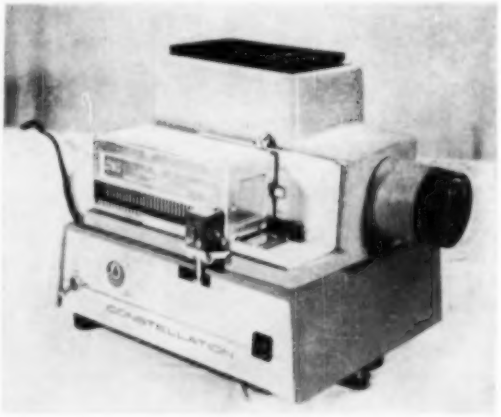

Graflex Constellation

control cable, $4.95 extra. Automatic timer, $24.50 extra. Capacity of each tray, 30 slides. Will accept all types of slides (cardboard, taped glass, and metal mounts). Automatic timer can be set for intervals from 1 up to 60 sec. Coated *f*/3.5 *Luxtar P* anastigmat lens of 5-in. focal length, focused by rotation of lens in helical mount. The double condensers and heat filter and easily removed for cleaning. Projector cannot be operated unless blower is on (desirable). The projector is equipped with an outlet for a room light; this outlet is wired so that when the projector lamp is turned on, a table or floor lamp is automatically turned off and vice versa, a good feature. Directional control switch permits reversing to show slides that have been projected. There was no provision to permit showing of single slides. For semiautomatic operation, pressing a bar key or a button at the end of the remote control cable changes the slides one at a time, in order. Light output, below average for a 500-watt projector. Evenness of illumination, fair. Projector was well baffled against light leaks. Resolving power of lens, fair. Temperature of slide, 180°F (somewhat high). Changer operated satisfactorily. One important advantage of this type of slide changer over the *Airequipt* as used on the *Graflex* and other projectors is that the slide trays are much cheaper, $1 each, compared to $1.95 for the *Airequipt*. For those who have a considerable number of slides, a considerable saving in the purchase of slide trays is afforded by using a changer which accommodates the much cheaper slide trays used by the *Powermatic*. There was a slight masking of the corners in projecting "Super Slides" (1½ x 1½ in. transparencies in 2 x 2 in. mounts). Although this projector carried the Underwriters' Laboratories' label, it failed to pass the standard proof-voltage test required of all electric appliances. Had it not been for this failure, it would have received a *B-Intermediate* rating.

• • •

List of recent BULLETINS giving reports on 35 mm. and 2¼ x 2¼ inch cameras and projectors, which should be referred to by those interested in information on many other makes and brands.

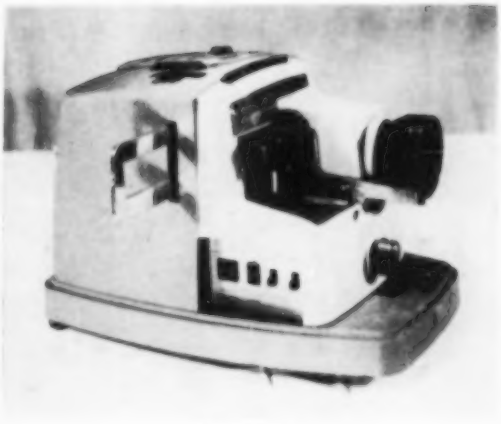

Powermatic

• CR Bulletin, January 1957—seven projectors for 2 x 2 slides; one projector for 2¾ x 2¾ slides.

• CR Bulletin, September 1956—six 35 mm. cameras, including *Vito B*, *Ricoh*, and *Rival;* three twin-lens reflex cameras; and one folding roll-film camera.

• CR Bulletin, February 1956—six 35 mm. cameras, including *Lordomat*, *Minolta*, and *Retina;* three projectors for 2 x 2 slides, *Argus*, *Revere*, and *Signet*.

• CR Bulletin, November 1955—ten twin-lens reflex 2¼ x 2¼ cameras, including *Rolleiflex*, *Rolleicord*, and *Minolta*.

• CR Bulletin, July 1955—twenty single-lens 35 mm. reflex cameras, including *Alpa*, *Exakta*, and *Contaflex*.

• CR Bulletin, June 1955—twenty higher-priced 35 mm. cameras, including *Canon*, *Contax*, *Leica*, and *Nikon*.

Cost of operating a car

THE American Automobile Association, on the basis of information from Runzheimer & Company, a Chicago cost accounting firm specializing in automobile operating-cost analysis, has sent out a bulletin indicating that a reasonable allowance for the cost of operating one of the smaller and lighter cars, such as the *Ford*, *Chevrolet*, and *Plymouth*, will be about $1.75 a day plus 3½ cents a mile. Those large corporations that reimburse employees for their use of a car on a flat mileage basis pay 8 cents a mile or more. According to The Dartnell Corporation of Chicago, which conduct an advisory service on sales management, 44 percent of the companies use the 8-cent figure; 6 percent use 9 cents, and 5 percent use 10 cents or more. The Dartnell Corporation (4660 Ravenswood Ave., Chicago) has set up a more accurate system of allowances for cases where personally owned cars are operated constantly on company business.

House trailers

Floor, side wall, and roof construction, insulation, financial arrangements in buying a trailer, and listings of 23 makes of trailers

This is the third in a series on trailers. "A preliminary report on trailers" appeared in the September 1956 Consumers' Research Bulletin. The second article, on trailer size, kitchen and bathroom arrangements, and electrical wiring, was in the April 1957 issue.

Heating the mobile home

Oil or gas heaters are used in mobile homes. Oil-fired space heaters have been used for several years with much success. These furnaces require some cleaning and attention to insure safe and odor-free operation.

Since most owners use gas for the kitchen range, there is a growing tendency to use bottled gas also for heating. The same gas supply can serve both the range and the heating unit. Gas heaters must be of the vented type to insure safe operation. In colder climates, where much heat is used, oil is normally a good deal less expensive fuel for heating than bottled gas.

Thermostatic control is common for both oil and gas furnaces. Heat distribution is accomplished by a fan in the heater which blows warm air through a duct system in the floor to floor registers at various places. Hot air blown from the furnace jacket provides heat for the area near the heater. Cool air is usually drawn from the floor at the heater, but in some installations, there is provision for bringing fresh air from out of doors by a duct through the floor under the heater. During the summer, the heater fan can be used to circulate outside air through the home.

Some dealers and manufacturers refer to "floor heat" in their homes. What is meant is that heat ducts are under the floor. These ducts should be insulated from the floor as well as from the air below, to insure good and efficient heat distribution. Ducts which are not insulated on their top surface next to the floor will cause overheating of the floor area immediately over the duct. This will cause uneven expansion of the floor material over the duct and cracks may develop in the floor covering material. Dealers claim not to have any difficulties with expansion and cracking of floors, but the possibility of such trouble must be considered. It is best to see a cut-away view of the floor construction to be sure of the duct layout and insulation.

Construction of the floor

Two by fours or two by sixes are used as floor joists over a steel frame. Either may be satisfactory if the flooring is of sufficient strength. Flooring may be ½- or ⅝-inch plywood. If you cannot detect any "spring" or "give" in the floor when taking short steps down the length of the trailer, the construction is strong enough for satisfactory service. It is best to make this test over the heat duct area, which is likely to be weakest, since the floor joists have to be cut to allow the ducts to pass through. Some manufacturers use frame and floor joists of steel, with the flooring screwed to the metal joists.

Flooring should be glued (except when metal joists are used) and attached to the joists by liberal use of screws. Some rising or buckling of the floor at the floor joists or cracking of the floor covering at the joints is a common difficulty. It is difficult to be sure that this condition may not develop, in time, but a well-fastened floor certainly reduces the possibility.

Most manufacturers use some kind of "insulation" under the flooring. Insulation does reduce the heat loss, but cold floors are more often caused by poor heat distribution and circulation inside the coach than by lack of insulation.

The walls

The side-wall construction of most mobile homes consists of aluminum on the exterior over 2 x 2 studding with 3/16- or ¼-inch plywood panels on the inside. The aluminum exterior or "skin" should be fastened with corrosion-resistant screws, about 6 inches apart. A plastic or synthetic-rubber tape is usually placed in the joints between the sheets of aluminum. The fewer joints in the exterior, the less the chance for rain to enter. All joints should be caulked with a weatherproof material, especially around window and door frames. Semiannual inspection and recaulking of some areas is one of the few maintenance jobs the owner must attend to.

Close spacing of studs in the side walls gives strength to the body. Inspect the exterior of the body for rows of screws running vertically. These lines will be at studs, but perhaps not at all studs. Press against the exterior between rows of screws to determine if studs are present elsewhere.

Side-wall insulation may be ½-, ¾-, or 1-inch blanket, with or without reflective foil, or insulation may be of the batt type fitted between the studs. Reflective foil has insulating value when it is next to air space but little insulating value when in direct contact with wood or metal. To be effective, reflective foil insulation requires an enclosed air space on both sides of the foil.

All walls should have a moisture barrier on the warm side. This may be a moistureproof paper, well lapped and securely fastened, or reflective foil over blanket insulation. A moisture barrier is necessary to keep moisture from penetrating from the warm side of the wall into the insulation. Moisture in the insulation reduces its insulating value and may cause deterioration of the wood structure of the body.

Some dealers and manufacturers talk about

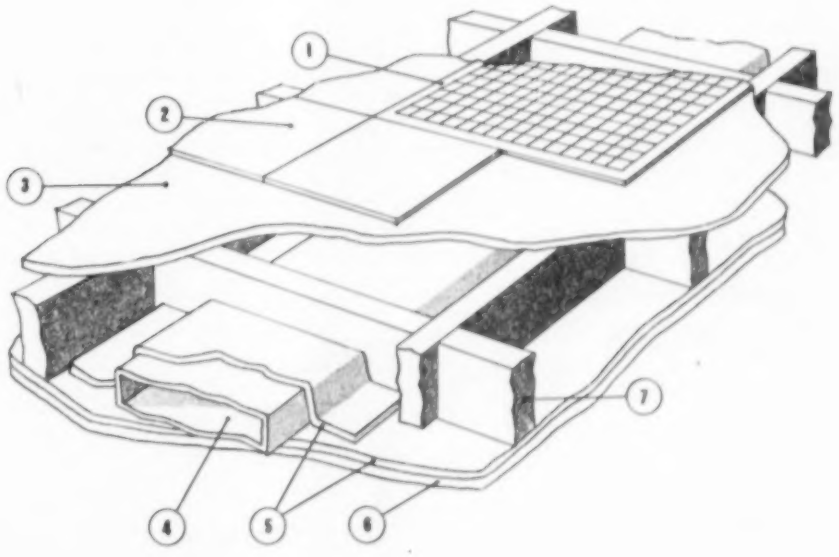

1 - warm-air register
2 - floor tiles
3 - plywood flooring
4 - heat duct
5 - fiber-glass insulation
6 - asphalt-impregnated insulation board
7 - floor joists

Batt-type insulation between side studs and outside the moisture-proof paper.

"dead air space" in the floor, walls, or top, and its insulating value. Since it is hardly practicable to have "dead air space" in a wall, the insulating value of air should not be counted upon. Some coaches have "ventilated" walls. This is all right if the ventilation is on the outside of the insulating material. The advantage claimed for ventilated walls is that they allow moisture to escape which would otherwise condense on the inside of the aluminum covering. A good moisture barrier on the warm side and weather-tight aluminum joints on the outside keep moisture out; thus, with good construction, there should be no moisture to be gotten rid of by ventilation.

Framing around doors and windows should be sturdy. To test the framing, press hard on the trailer body near a door and a window. A slight springing is normal and quite satisfactory, but if the springing seems great, the framing is not good and may eventually lead to loosening and misalignment of door and window frames.

Painting the aluminum exterior adds little if anything to the life of the mobile home. In some cases the paint peels off and, if the surface is not repainted, leaves an undesirable appearance. Any dark-colored paint may greatly reduce the heat reflecting value of the bright aluminum. (See CONSUMERS' RESEARCH BULLETIN of April 1956, pages 29-30.)

A few manufacturers use plywood or masonite sheathing over the studding and under the aluminum covering. This adds strength to the body and forms a tighter outer wall, thus affording a more nearly "dead" air space between the studs.

Interior walls are usually plywood panels. A variety of woods and finishes are offered. Most of these have a varnished surface with either a satin finish or high luster. A few manufacturers offer an interior finish of paint on plywood or masonite. A painted wall has the advantage of being more easily refinished than a varnished one. Marks are sure to get on the walls from contact with chairs or other objects.

Although in cold climates there is some problem of moisture dripping or running from the bottom of metal window frames, the use of metal window frames is universal. Conduction of heat from the inside of the home to the outside makes the frame colder than the adjacent interior wall; the moisture present in the air in the home will condense on the cold window frame. Drops of water form and run down the wall under the window and will stain a varnished surface. A painted wall is less likely to be damaged in this way.

The roof

Construction of the top of mobile homes varies greatly. All that has been said in preceding paragraphs about the moisture barrier and insulation in the side walls applies to the top, with even greater emphasis on the importance of the moisture barrier and the thickness of the insulation. Since warm air rises, a greater heat loss occurs through the ceiling than through the walls. The roof may well use twice as much insulation as the walls. In the past, some owners have been troubled with moisture in the ceiling. Sometimes this is due to a leak in a roof joint or seam, but it may be due to accumulated moisture being carried up into the top and

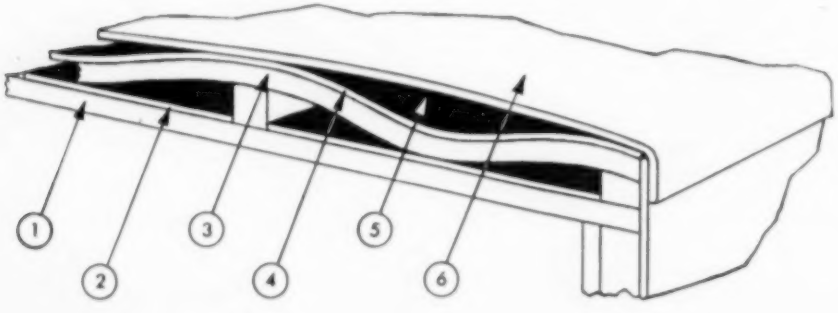

1 - plywood inside
2 - aluminum foil moisture barrier
3 - insulation
4 - aluminum foil reflective surface
5 - air space
6 - one-piece metal roof coated with mastic coating

condensing there on cold surfaces. A proper moisture barrier will greatly reduce leakage of moist air into the space above the ceiling. Any moisture from the interior present above the ceiling can be eliminated by attic ventilation above the insulation.

Two by fours and two by sixes are commonly used as rafters, with spacings of 16 inches or more. The size and spacing of rafters are interrelated in determining the strength of the top, which also depends on the presence of sheathing over the rafters and the thickness of metal used in the roof covering. Some manufacturers use a sheathing material over the rafters for strength of construction. This also reduces noise from rain on the metal roof.

Mobile home roofs are usually wide strips of sheet metal put together with "locked" seams and coated with a mastic material. The mastic coating needs renewing occasionally to insure weather-tightness and long life of the metal.

Purchasing the trailer

It makes little difference to the dealer whether you pay him in full or "finance" a portion of the cost. The lending agency accepting your conditional sales contract will pay the dealer the cash. Thus, while the purchaser cannot expect to get a substantial discount for paying cash, he will save the finance charges, which would be a considerable amount.

You may expect a good price from a dealer if you have *no trade-in* and can offer the required down payment in cash. Some dealers have more than one price for a coach; the "trade-in" price and the "no-trade-in" price, sometimes called the "cash" price. Twenty-five percent is the minimum down payment on new homes and 33 percent on used ones. If you can make a deal for less than 25 percent down, there is a good chance that your payments may be "ballooned" (see CONSUMERS' RESEARCH BULLETIN of December 1956, page 2); that is, your last payment will be much greater than you expect to have to meet and you may then have to refinance your trailer to meet the big payment.

When you purchase a trailer, as with almost anything of substantial value, act only on the basis of a written agreement covering price, the services the dealer will provide, and insurance coverage; be sure you know exactly the size and model of the trailer you are buying. Some have bought a trailer and found out later when wanting to trade or sell, that the model was a year old when they bought it, or that it was smaller, or a different model from what they thought they had bought.

The listings include only a few of the several hundred makes of trailers. Those included in *B*– group are among the lowest-priced mobile homes, and while they offer reasonable living accommodations, they cannot be expected to be as desirable as the better-built higher-priced ones. However, they may be good buys, when price is considered.

A. Recommended

Angelus (Angelus Trailer Mfg. Co., 1120 N. Tyler Ave., El Monte, Calif.)

Boles-Aero (Boles-Aero Inc., 3101 N. San Fernando Rd., Burbank, Calif.)

Branstrator (Branstrator Engineering Corp., 2330 Sand Point Rd., Ft. Wayne, Ind.)

Geer (The Geer Co., 317 N. Kimball, Grand Island, Nebr.)

Luxor (Luxor-Leffingwell Coach Co., Brookville, Ind.)

Mobile Cruiser (Mobile Trailer Co., Marysville, Mich.)

Platt (Platt Trailer Co., Inc., Elkhart, Ind.)

Schult (Schult Corp., 1800-30 S. Main St., Elkhart, Ind.)

Spartan (Spartan Aircraft Co., 1919 N. Sheridan Rd., Tulsa, Okla.)

Stewart (Stewart Coach Industries Inc., Bristol, Ind.)

Superior (Superior Mobile Home Corp., U.S. Hiway 33, Osceola, Ind.)

Trotwood (Trotwood Trailers Inc., Trotwood, Ohio)

Vindale (Vindale Mobile Homes Inc., Hay Ave., Brookville, Ohio)

B. Intermediate

Fairlane (Fair Lane Homes Inc., P.O. Box 272, Middlebury, Ind.)

Florence (Close Engineering Co., 3950 Detroit Ave., Toledo, Ohio)

Imperial (Imperial Mobile Homes Co., 111 Boston Ave., West Pittston, Pa.)

Michigan Arrow (Michigan Central Airlines Inc., 1401 S. Dort Hiway, Flint, Mich.)

Nomad (Nomad Mobile Homes Inc., 301-17 W. 31 St., Chicago 16)

Safeway (Safeway Trailer Sales Co., North Bend, Nebr.)

B–

Buddy (Buddy Mobile Homes Inc., 1601 W. Bristol St., Elkhart, Ind.)

Elcar (Elcar Mobile Homes, Bourbon, Ind.)

Nashua (Nashua Management Corp., Route 12, Kansas City 16, Mo.)

Richardson (Richardson Homes Corp., P.O. Box 282, Elkhart, Ind.)

Now—color slides for everyone

Comeback of an old film size, No. 127; new fast color film

TWO DEVELOPMENTS in amateur photography that may create a small revolution in the camera trade and greatly step up interest in small cameras and small pictures are in the offing.

New 127 film

A significant development was shown at the big photographic exposition held in Washington recently (March 22-31). The once popular film size, No. 127 (eight exposures 1⅝ x 2½ or twelve exposures 1½ x 1½), apparently is getting a new lease on life, for both Eastman and Ansco are bringing out color films, *Ektachrome* and *Anscochrome*, in this size.

Not too many years ago, the "vest-pocket" camera was popular, but, with the coming of the 35 mm. and the 120 size films, its use decreased, and, until recently, manufacturers have looked upon it as a more or less obsolete size.

When Burleigh Brooks, Inc., introduced the "*Super Slide*," which permitted the popular reflex size cameras (2¼ x 2¼) to take pictures which could be projected in the widely-available projectors used for 35 mm. film—with the added feature of picture area about 80 percent greater—film manufacturers became interested in the idea. Eastman particularly noted the possibilities, and spotted the obvious fact that the 127 size film was most logical for taking pictures in the "*Super Slide*" format.

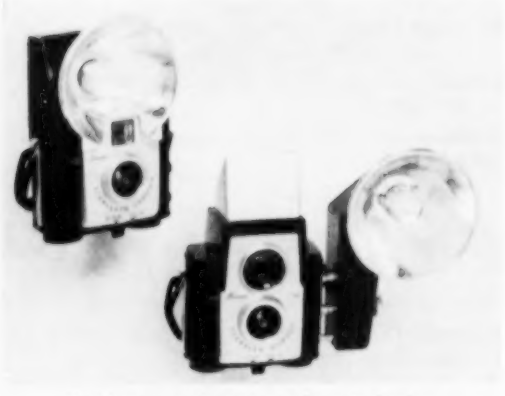

Kodak Brownie Starflash and Brownie Starflex

In any event, not only have Eastman announced the availability of the 127 size film in *Ektachrome*, but they have already developed two new inexpensive cameras to use it. These are the *Kodak Brownie Starflex*, which will sell for $9.95, and the *Brownie Starflash*, which will sell for $8.50. Incidentally, the film will make 12 pictures per roll. It sells for $1.10 with a processing charge of $1.50 per roll.

It is understood that Ansco will offer the 127 size in *Anscochrome* only, and not in the new, very fast *Super Anscochrome*. The latter film which has an A.S.A. rating of 100 is too fast to be used in the cheap box cameras recently brought out by Eastman for the 127 film. (The reason is that the basic exposure time of *Super Anscochrome* is about 1/500 second at *f*/6.3—or 1/100 at *f*/16—in bright sunlight, and only fairly high-priced cameras afford these fast shutter speeds.)

Sports Rolleiflex

There will be a top-grade German camera to use the 127 size. The makers of the very successful *Rolleiflex-Rolleicord* cameras, Franke and Heidecke (distributed by Burleigh Brooks, Inc., New York City), are bringing back to the market a new version of their once highly popular *Sports Rolleiflex*, taking 4 x 4 cm. pictures on 127 film. This camera has been off the market for about 15 years. The new compact "Rollei 4 x 4" will have an *f*/3.5 lens, flash synchronization, an improved viewing system, a new automatic film-loading method and winding procedure. It will sell for about $150 with case.

Super Anscochrome new fast color film

The new *Super Anscochrome* is, as already noted, an extremely "fast" color film. Its A.S.A. rating is 100. With an increase in development time, the speed can be pushed to 200 A.S.A. This is the speed the fastest black-and-white films had until a couple of years ago, and the 100 A.S.A. rating is five times as fast as one of the most widely used color films available heretofore and 10 times the speed of the usual fine-grain color film, which had an A.S.A. rating of 10. This means that cameras with relatively slow lenses can now be used for color pictures in conditions under which color photography would have been impossible previously.

At present, *Super Anscochrome* is being offered in the 120 and 35 mm. sizes at $1.75 and $2.35, respectively, which is 40 percent and 22 percent above prices of regular *Anscochrome* film. The present *Super Anscochrome* film is for outdoor use (daylight type only) or for use with electronic flash or blue flash bulbs.

A striking advantage of the new *Super Anscochrome* will be that it makes it possible for the

amateur to get good pictures of scenes in which the range of light values is wide. With the slow color film hitherto available, the photographer was limited to pictures in which dark shadows and bright sunlight were not present in the same scene if he was to get good color rendition. With the new film, he may take pictures in which the range of light intensities is wide, just as though he were using black-and-white film.

Added note: The *Starflex* and *Starflash* cameras mentioned on page 14 were used with *Daylight Ektachrome 127* film and produced good transparencies—as good, indeed, as would be expected of many cameras at considerably higher prices.

Booklet on electrical shock hazard

WE ARE PLEASED to call attention of our readers, particularly all those interested in the manufacture and safe use of electrical appliances, to a reprint, by the Bureau of Ships, containing a valuable series of articles on electric shock, its causes and its prevention, which originally appeared in the Bureau of Ships Journal. This reprinting was brought about by the wide interest displayed in this subject, and the numerous requests received from industrial firms, libraries, and colleges for additional copies of the papers.

Every factory owner should bring the essential elements of the material in this pamphlet, in simplified and abbreviated form perhaps, to the attention of his foremen and supervisors, in order that they may understand something about the many ways in which electrical machinery and appliances may present hazards of shock. The engineers who work in the design and development of every sort of electrical appliance for the household should be familiar with all of the many important considerations which this pamphlet presents, particularly the various ways in which a device or tool which *seems* to be safe may involve a dangerous shock hazard in certain combinations of circumstances. It should be borne in mind that the strength of current (about 5 to 10 milliamperes) which prevents voluntary action of the muscles (and so may "freeze" the victim to the appliance or tool) is not very far from the current which is just perceptible. The *current which can cause death* by shock is only about a third (1/3) of that which flows through the lamp of the ordinary 2-cell flashlight. Even a much smaller current, as little as one or two *thousandths* of the current that passes through a 100-watt tungsten lamp, may cause death or grave injury, if for instance one receives a slight or moderate shock that will cause one to start and fall from a ledge or ladder, or to knock a kettle from the stove or to drop a pail of boiling water or bring about some other unexpected but potentially dangerous incident.

For copies of the pamphlet, Electric Shock, Its Causes and Its Prevention, address Superintendent of Documents, U.S. Government Printing Office, Washington, D.C., and send 20 cents (cash) for each copy desired.

Acknowledgments

The following is a list of credits for pictures supplied by outside sources.

Page 2—The Hettrick Mfg. Co.

Page 10 and 12—Alma Trailer Co.; Luxor-Leffingwell Coach Co.

Page 14—Eastman Kodak Co.; Burleigh Brooks, Inc.

Record players

WANT TO ENJOY really good reproduction of the music on records? If you do, you have a chance to join either one of two groups of record fans.

In one group will be found those devotees of high fidelity who are principally interested in the best possible reproduction of music they can afford. Their record-playing facilities, often assembled at home, consist of carefully related separate components including turntable, pick-up, preamplifier, compensator, amplifier, and speaker system. The last-named usually consists of two, three, or more speakers with a cross-over network to separate electrically the low and high tones and feed them to two or three special types of loud-speakers ("woofers," "squawkers," "tweeters"). The cost of such a system may run from $150 up to a thousand dollars or so. The inbuilt capability of such a system to provide the very best in home reproduction makes it necessarily somewhat intricate and calls for care in the use of its controls, to get the best results.

The second and doubtless larger group of persons interested in musical reproduction is made up of those who do not have the time and patience, and who in most instances lack the desire to assemble components to build up a system specially suited to their needs. While their selection must be confined to a manufactured combination, they want it to be one that is capable of very good reproduction. At a minimum, they expect it to offer marked improvement over the quality of reproduction found in console radio-phonograph combinations of 1946-52 vintage.

The ready-made record players can be separated into three general classes on the basis of price range. One need not expect players in the low-priced class—$10 to $100 or thereabouts—to offer good reproduction; it will often be pretty poor. Moreover, CR has found that several brands of players it has examined show a real hazard of electric shock, particularly the players in the lower half of the low-price range.

Those included in the high-priced group—from $350 up to $2000 or more—usually provide facilities for AM and FM radio reception, and some will also include a tape recorder. The quality of reproduction available from some models in this group is excellent.

Practically all of the manufacturers who supply a product in the $100 to $350 range have called their products "High Fidelity Record Players." Their use of the term is not really warranted. Actually, the great majority of the $100 to $350 players now available do not pro-

vide the high quality of reproduction that a good home-assembled system of components can offer. This is true even of ready-made record players in a still higher-priced bracket. These middle-priced players, however, do afford a very pleasant change when compared with record players made only a few years ago; they make it possible for many homes to have record-playing facilities which offer good tone quality and are capable of providing the listener with much musical enjoyment.

A good medium-priced record player should include:

1. A record-changer (turntables, which carry only one record at a time, are chiefly for the hi-fi fans), cartridge with two sapphire styli;
2. A good audio amplifier with transformer power supply and so-called push-pull output;
3. A speaker system, with separate speakers for the low and high tones, and a well-constructed wooden cabinet.

The minimum number of controls which should be present are a speed selecting switch for the record changer, a volume control, and separate tone controls for bass and treble emphasis. Other controls which may be included or substituted, such as a record compensator or equalizer, and a loudness control which accentuates bass and treble at low volume, are essentially refinements. They are not considered necessary to satisfactory performance for most users; many would probably find them of little practical value. Ease of servicing should also be considered. Of the models tested, the *Motorola* and *Zenith* would be more readily serviced than the others.

The ratings of the models included in the listings that follow are based on careful tests. Measurements included covered power output, distortion present at several frequencies, range of response, and leakage current (a measure of the shock hazard present). Only one player, the *RCA 7HF4*, had excessive leakage current, a measure of the potential hazard from electric shock if the user should touch certain accessible metal parts of a player while at the same time touching or standing on an electric "ground" such as a hot-air register, radiator, or heating pipe.

Details on the technical aspects of our findings have been omitted, since it is felt that such information would be of little interest to any but the technically inclined among our readers.

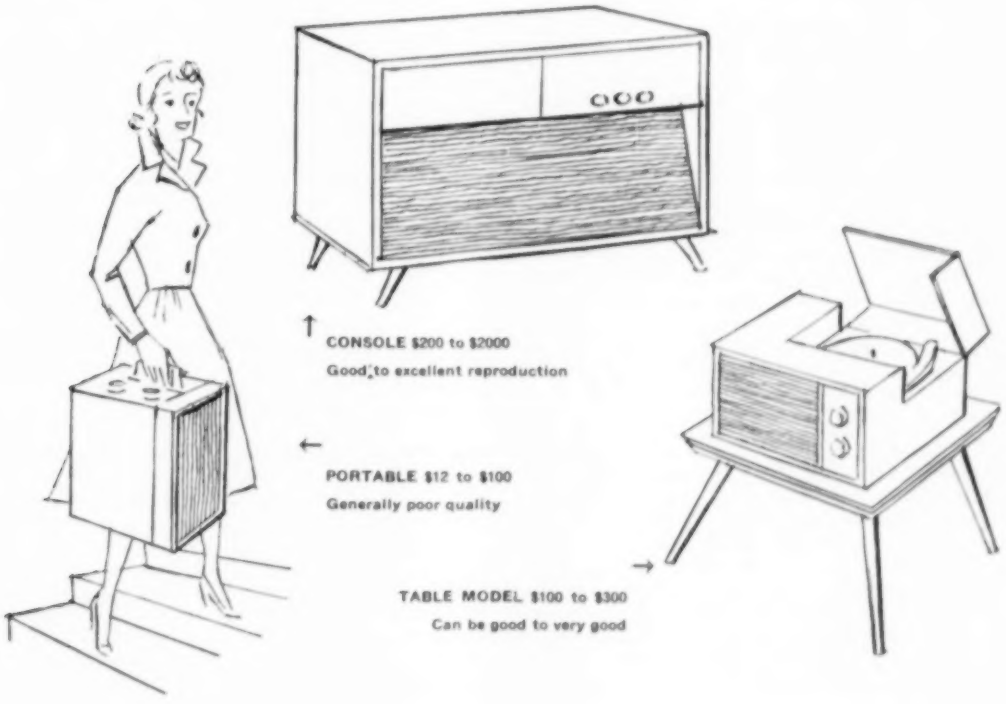

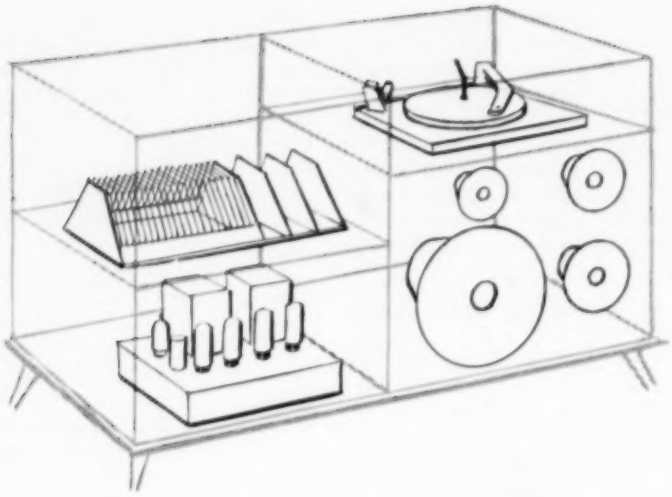

Phantom view of a console record player showing amplifier, changer, speakers, and section for record storage.

A. Recommended

Motorola, Model 67HFK2 (Motorola, Inc., Chicago) $230. Console. 4-speed record changer. The quality of reproduction was judged to be above average for the group of record players tested, and the volume of sound output was more than adequate for home listening. Cabinet workmanship and the amplifier used were above average. The 4-speed record changer was of a grade judged barely satisfactory, for this class of equipment. Tonal range and action of tone controls were satisfactory.

Zenith, Model HFZ-18R (Zenith Radio Corp., 6001 W. Dickens Ave., Chicago 39) $200. Moderate-sized console with short legs. 4-speed changer. The quality of reproduction was judged above average with more than sufficient volume available, when desired, for home listening. The output, however, was noticeably distorted when the treble tones were reduced. The speaker system was above average. The changer and amplifier were satisfactory, although a greater range in the action of the bass and treble tone controls would be desirable. The cabinet was well constructed.

B. Intermediate

Magnavox, Model CP271C (Magnavox Co., Ft. Wayne 4, Ind.) $160. Console. 4-speed changer, automatic or manual operation. Capable of pleasing reproduction at reasonable (moderate) volume. With the bass notes accentuated and the volume turned up, there was a pronounced cabinet rattle (vibration) that was objectionable. Otherwise the cabinet workmanship, components, general design, and tonal range were judged adequate, although not outstanding, for this general class of record player.

C. Not Recommended

Fisher, Model 50M (Fisher Radio Corp., 21-21 44 Drive, Long Island City, N.Y.) $265. Console. 3-speed (33-45-78) changer. Judged separately, the parts of this record player would seem to indicate that good quality reproduction should be available. The player was, for example, the only one in which a variable-reluctance cartridge was used (cartridge was equipped with diamond styli). In both samples CR tested, however, appreciable hum was present in the sound output; this is a definitely undesirable characteristic.

RCA, Model 7HF4 (RCA Victor Radio and "Victrola" Division, Radio Corp. of America, Camden 8, N.J.) $180. Small console with legs. 4-speed changer. Judged a poor buy as compared with the *Motorola 67HFK2*. The volume of sound output available was less than on some of the others reported here, and the tone controls provided did not have the range that would be desirable. Quality of reproduction was mediocre. Leakage current, a measure of the shock hazard present, was slightly higher than the limit Consumers' Research deems permissible.

VM Fidelis, Model 565A (VM Corp., Benton Harbor, Mich.) $220. Console with legs. 4-speed changer. Overall, performance was judged to be below average. The amount of distortion present in the reproduced music was entirely too high. Any record player sold on the basis of its ability to reproduce recordings faithfully ("flawless, authentic high-fidelity reproduction" is claimed) should have separate bass *and* treble controls. A greater volume of sound than this player afforded would be desirable. The cabinet was heavy (desirable) and well built.

The small battery takes up considerable space in the case of the Magna electric lighter, leaving a small volume for lighter fuel.

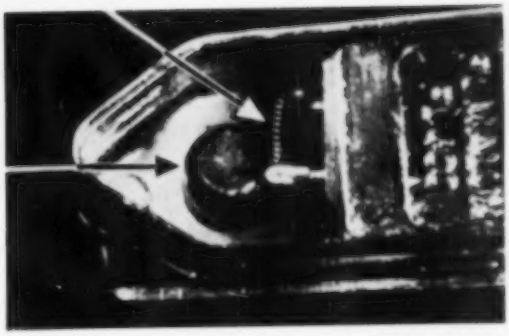

The wick (indicated by the black arrow) of the Magna lighter is ignited by the glowing element shown above by the white arrow.

A new kind of cigarette lighter

THE *Magna* electric cigarette lighter is a recent import from Germany. While this lighter uses ordinary lighter fuel, it does not use a so-called flint (actually a cerium-iron alloy) and a striking wheel to ignite the wick. The lighting of the wick is done by a small resistance element which is heated to a bright red by electric current passed through it from a tiny battery. Pushing the release lever on the side of the lighter opens the cover, makes contact between the heating element and the battery, and at the same time moves the heating element close enough to the wick to ignite the vapor.

The lighter itself is housed in a chrome case somewhat larger than the lighters reported on in the December 1956 BULLETIN. Also included in this case is a very small pre-focused bulb which is powered by the same 2-volt battery that supplies the ignition. A small push button on the side of the lighter lights this bulb. This light might be useful for limited applications such as reading the time on a bedside clock, finding the correct key on a ring, or locating the keyhole in a lock at night. Any extensive use of the light will, of course, limit the number of ignitions available. (The lamp bulb uses roughly one third as much current as the resistance element.)

CR tested the battery for the number of times it could be used before exhaustion, and found that one battery should light the wick about 1200 times (if no use is made of the small built-in flashlight). The fuel capacity of this lighter is limited because a large part of the space in the body of the lighter is taken up by the battery. It was found that this lighter gave only somewhat over 200 lights per filling. This was considerably lower than any of the lighters tested previously and reported in the December 1956 BULLETIN, and very far below the better ones. The lighter comes with a kit, including a spare bulb, battery, wick, igniter coil, and a very small screw driver with which to effect replacement of the heating element.

B. Intermediate

Magna (Magna-Lux Corp., 222 Fourth Ave., New York 3) $9.95, including a kit for replacement parts. Made in Western Germany. Chrome-plated case. Weight complete, 2.6 oz. (about average for the usual types of non-electric lighters). Number of lights per filling, far below average for ordinary flint-and-sparking-wheel lighters. Fuel capacity, 0.06 oz. A replacement battery is readily available from the Magna-Lux Corp. at 75c. The lighter would warrant an *A* rating for those to whom the cost of replacement battery and the small fuel capacity are not important. 3

Three types of blade tips. Left to right: a "Phillips" cross tip, a cabinet tip, and a common flared tip.

Screw drivers

The screw driver is a simple and familiar tool, but tests just conducted by Consumers' Research show that it is well worth while to exercise some care in choosing one.

Consumers' Research was interested in learning whether tools such as the householder might buy at the variety chain store or department store would serve about as well as the more expensive ones that would be purchased at much higher prices by skilled mechanics. The findings showed that, by choosing carefully, one can get screw drivers of good grade at prices from 25 cents to $1.25, and that some tools in the higher price class may be of about as poor quality as some of the cheapest ones.

In using the ratings as a guide for purchasing a screw driver, the reader is advised to keep in mind the intended use of the tool. For frequent or hard use, it would certainly be wise to buy a screw driver of good quality. However, for occasional light use an inexpensive tool of lower quality would often serve well enough.

VERY LIKELY the screw driver is more misused and abused than any other tool. Frequently a screw driver is the only tool handy, and is pressed into service even though it is the wrong tool for the work to be done. Thus a screw driver may often be called upon to withstand hammering when in some emergency it is used in place of a chisel, or to resist severe bending stresses when used to pry.

It is important to use a screw driver of the right size and type for each job. The tip should fit without excessive clearance in the screw slot and should be wide enough almost to fill the length of the slot. (If the screw is not to be driven below or flush with a surface, there is no harm in using a driver that is a little wider than the screwhead.) If the screw is to be driven appreciably below the surface, a "cabinet"-type tip with parallel rather than the more common flared sides should be used. For screws with recessed cross slots, a cross-tip or "Phillips"* type of driver of the right size is required. (Cross-tip screw drivers were not included in the tests reported here.)

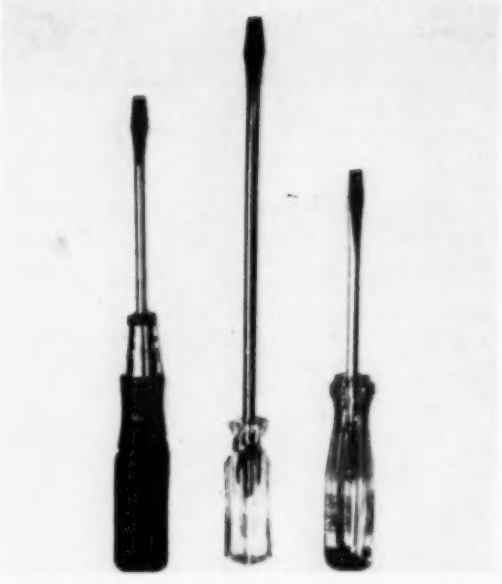

The size and shape of the handle is a factor in selecting a screw driver. Left to right: the Yankee handle is large enough and comfortable to hold and use, the Ozwall handle is too small for efficient use of the tool, and the Proto fits the hand comfortably.

* "Phillips" is the trade name of a widely known cross-recess type screw and matching drivers. True "Phillips" drivers bear that name, and other cross-tip drivers may not fit perfectly the patented "Phillips" recess, although some drivers not marked "Phillips" work satisfactorily on this type of screw.

Consumers' Research purchased, examined, and tested a considerable variety of flat-tip screw drivers of small and medium size ranging from those sold in variety stores at prices from 15 cents up, to those claimed by hardware store clerks to be "best quality," at prices around $1 or more. While the more expensive tools were generally found to be better with respect to toughness of steel and general construction than cheaper ones, CR's experience showed that paying higher prices will not always assure good quality.

CR tested the hardness of the tip of the steel blade of each screw driver. A federal government specification for flat-tip screw drivers requires that hardness shall be from 48 to 58 inclusive on the "Rockwell C" scale (the harder materials are designated by higher numbers). If a screw driver blade is too soft, it is pretty certain not to stand up in use. Even though a blade tip shows an acceptable hardness, the steel may be too brittle or have other defects.

Tests were made of the screw-turning ability of each driver. The screw driver was used to turn a slotted metal piece attached to an arm and weights in such a way that the turning effort transmitted to the head of the screw (the torque) could be measured. (See photograph, below.) Torque was applied to each driver in this way up to the value given in the federal specification for a blade with a tip of the same width.

The wood or plastic handles of all the drivers tested could be ignited by the flame of an ordinary match. Several of the wooden handles flared up quickly when lit because of the finish-

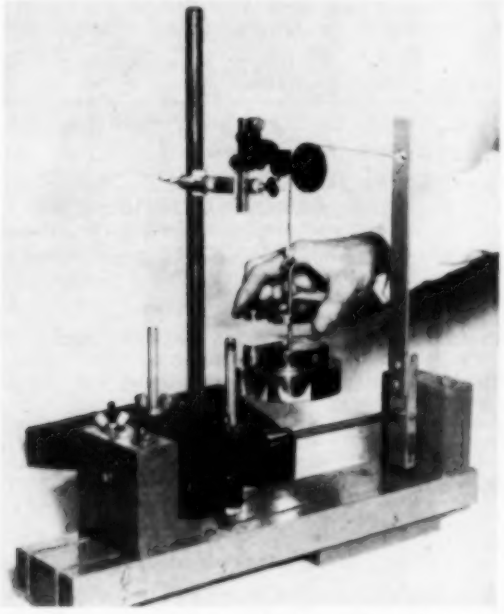

Torque was applied to the tip of each screw driver to test the twisting strength of the blade and of the fastening of the blade in the handle.

Burning plastic handle of an Ozwall screw driver, guaranteed by the manufacturer as "flameproof."

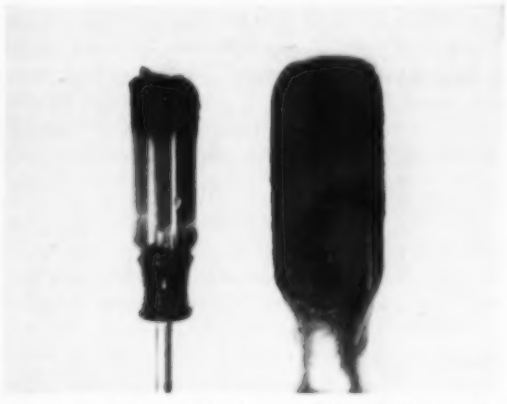

Some screw driver handles burn readily. At the left, the plastic handle of a Sears Craftsman driver, and at the right, the wooden handle of a Sears Dunlap driver, after they had been lit with a match and allowed to burn for only a few seconds.

ing materials used on their surfaces; others were harder to ignite and burned slowly. The plastic handles melted as they burned, and some of the falling drops continued to burn. Some burned faster than others. Two of the drivers tested had plastic handles bearing the Underwriters' Laboratories' (*UL*) label. These were among the ones that burned relatively slowly. A set of *Oxwall* drivers bearing the *UL* label on the cardboard box had handles made of plastic which burned fairly easily.

Sizes are given in the following listings by entries such as 4 x ¼, meaning that the blade length, from its tip to the bottom of the handle, is four inches and the tip width is ¼ inch. Cabinet style tips (parallel sides) are so designated; all other drivers tested had the common type of flared tip. Blade shanks were round unless otherwise designated.

A. Recommended

Proto 9604 (Proto Tools, Los Angeles 54) $1.15. 4 x ¼. Amber plastic handle. **3**

Yankee, No. 90 (North Bros. Mfg. Co., Div. of Stanley Works, Philadelphia 33) Two samples tested, 5 x 5/16 at $1.10 and 4 x ¼ at 95c. Black wooden handles. **3**

* * *

Great Neck (Great Neck Saw Mfrs., Inc., Mineola, N.Y.) 25c. 4 x ¼. Black wooden handle. Blade extended through handle to round steel piece set in upper end of handle. The tip was deformed slightly in the torque test. **1**

Irwin 400 (Irwin Auger Bit Co., Wilmington, Ohio) 65c for *No. 400-6"*, 6 x 5/16; 48c for *No. 400-4"*, 4 x ¼; 40c for *No. 400-3"*, 3 x 3/16. Amber plastic handles. The 3-in. driver tip broke at a torque just below the maximum specified for this size blade. Tips of these drivers were thicker than average. **2**

Stanley 100 Plus, No. 1006 (Stanley Tools, New Britain, Conn.) $1.25. 4 x ¼. Amber plastic handle with black trim. Had *UL* label. The tip was deformed slightly in the torque test. **3**

B. Intermediate

Oxwall 25 1/4 x 4 (Oxwall Tool Co., Ltd., New York 10) 25c. 4 x ¼. Red wooden handle. Hardness was satisfactory. The tip was deformed somewhat in the torque test. **1**

Oxwall 29 1/4 x 1-1/2 (Oxwall Tool Co., Ltd.) 15c. 1¾ x ¼. A "stubby" driver with red wooden handle. Hardness of blade was satisfactory. The tip was deformed somewhat in the torque test. **1**

Sears Craftsman (Sears-Roebuck's Cat. No. 9—4150) $2.25, plus shipping charges, for a set consisting of a pocket-type driver and three others with square shanks 6 x 5/16, 4½ x ¼, and 4 x ⅛ cabinet. Clear plastic handles with blue and red trim burned relatively quickly and flared in burning. Blade hardness was satisfactory. The tip of one driver was deformed slightly in the torque test, and plating flaked off the bent tip. **2**

Stanley, No. 75 (Stanley Tools) About 80c. 6 x ¼ cabinet. Finish of wooden handle ignited easily and flared in burning. Hardness was satisfactory. The tip deformed slightly in the torque test. **2**

Wardmast'r (Montgomery Ward's Cat. No. 84—4910) $3.69, plus shipping charges, for a set consisting of a pocket driver, a "Phillips"-type driver and so marked, three flat-blade drivers with square shanks, 6 x 5/16, 4 x ¼, and 1¼ x ¼ (a "stubby" screw driver), and a wall bracket. Clear plastic handles with blue trim burned relatively quickly and flared in burning. Passed hardness and torque tests satisfactorily, except the "stubby" driver. Plating flaked off the blade tip of the "stubby" driver, the metal beneath was below specification hardness, and its tip was deformed slightly in the torque test. The wall bracket was suitable for its purpose. **2**

Proto 9704 (Proto Tools) $1.19. 4 x ¼. Wooden handle with metal cap. Square shank blade. Hardness was satisfactory, but the tip broke in the torque test at a torque just under the maximum specified for this size blade. **3**

Stanley, No. 2006 (Stanley Tools) 90c. 4 x ¼. Amber plastic handle with green trim and green plug in center. Had *UL* label. Hardness was slightly below specification, and the tip deformed slightly in the torque test. **3**

* * *

The following screw drivers were found to be inferior to those previously listed, but were deemed acceptable for limited home use.

Oxwall Set, No. 3789 (Oxwall Tool Co., Ltd.) 98c for a set consisting of a wall bracket and six magnetized drivers, one with screw holder, and a cross-tip driver. Handles, made of amber plastic, were not as well finished and were smaller than those of other makes. (See photograph, page 20.) **1**

Oxwall 30 3/16 x 4 (Oxwall Tool Co., Ltd.) 20c. **1**

Stanley Defiance 1270 (Stanley Tools) 25c. **1**

Stanley Handyman H1270 (Stanley Tools) 25c and 29c. **1**

Woolco (F. W. Woolworth Co.) 19c and 29c. **1**

C. Not Recommended

Sears Dunlap (Sears-Roebuck's Cat. No. 9—4111) 85c, plus shipping charges, for a set consisting of two flat-blade drivers and a cross-tip driver. In the torque test, both flat-tip blades turned in the wooden handles. **1**

An inexpensive air compressor

WELL-EQUIPPED HOME WORKSHOPS sometimes have some sort of air compressor. Even though a compressor can hardly be termed an essential piece of equipment, it is a very useful one for the "do-it-yourself" enthusiast.

The more important uses of a compressor are furnishing air for brazing or soldering, gun spraying of various paints, lacquer, and insecticides; inflating swimming floats and tires; glass blowing; and blowing out dust in cleaning up shop tools after use. The cost of a good compressor is rather high considering the small amount of use it will receive from the average householder, but on some jobs it can be a real time saver.

Generally, small air compressors come with gun, motor, and hose as a unit. The least expensive are priced at about $42, are operated by a ¼-horsepower motor, and deliver about 1.2 cubic feet of air per minute at 25 pounds pressure. This is sufficient to operate a spray gun, but the pressure is not quite high enough to inflate tires.

The *Paramount* air compressor, tested by CR, is advertised as delivering 2¼ cubic feet of air per minute at 30 pounds pressure, with a maximum pressure of 100 pounds, when operated at 1700-1800 revolutions per minute by a ¼-horsepower motor.

This compressor operated a spray gun very well, and maintained a pressure of 30 pounds per square inch. When used at a higher pressure as required in inflating a tire, operation was satisfactory but somewhat slow.

The added cost of a motor, gun, hose, and fittings for spray painting would bring the total amount to about $36, or nearly as much as a complete spray unit. But with the purchase of such added equipment, the user would have the very real advantage of a compressor that could be used to inflate tires, an operation which would not be possible with a regular spray outfit.

A. Recommended

Paramount Air Compressor, Model 20 (Distributed by Roberts Electric Co., 849 W. Grand Ave., Chicago 22) $12.95, postpaid. Motor, $9.50 extra.

Description: A small (9¼ in. high x 6¾ in. wide x 5 in. deep), compact unit having a cast metal frame and cylinder, incorporating a valveless air intake, an air receiver (3 in. diameter x 3¾ in.), spring-actuated-ball air-pressure regulating valve, and pressure gauge (0 to 100 lb. x 2 lb.). The piston has a cup leather which must be oiled at regular intervals, and the piston connecting rod has a sealed ball bearing. A pulley of the proper size is included in the assembly. An instruction booklet is supplied.

Operation: The air pressure output of the unit is adjustable from 2 or 3 lb. to a maximum of 100 lb. per sq. in. Operation was relatively quiet. The compressor head became quite hot on its initial run, but the machine ran cooler after a short period of operation. (The compression process itself gives rise to a considerable amount of heat.)

Comments: A compact, low-cost air compressor for the small farm or home shop which should give adequate service in the home workshop or private garage if properly cared for. Could be very easily made up on a wheeled cart to transport to the job. At the moderate price of $12.95, the *Paramount* should prove to be a useful addition to the home shop equipment where there is a need occasionally for a supply of compressed air up to a maximum pressure of about 100 lb. per sq. in.

Light colored paint for roofs

In our April 1956 Bulletin, we pointed out the desirability of light colored paints for roofs. A recent study by Socony Mobil Oil Company reported to the American Petroleum Institute indicated that light pastel shades of cream, light blue, and light pink are rather effective and not far below white in reducing the temperature of the surface. White, however, is best by a considerable margin, as indicated in our April article, compared with some tinted paints of gray or cream shades (or aluminum paint). The difference in favor of white paint as against dark colors is startling. In one series of tests, a surface painted olive drab reached 215°F during one 15-minute period, and temperatures above 190° for as much as four hours were common. With white paint, the temperatures rarely reached 160° on the same surface.

Three qualities are needed in paint for heat-reflection purposes: (1) a high degree of brightness or "whiteness"; (2) the ability to remain white or very light in color by resisting accumulation of atmospheric dirt and by resistance to staining; (3) a long life to maintain the original condition as long as possible.

The oil company's researchers recommended a paint containing a titanium dioxide pigment with a high ratio of pigment to vehicle, which minimizes dirt collection and staining, and also permits slow wearing off of the surface by "chalking" (paint coming off as dust, in the weather); the chalking tends to keep the paint clean and light in color. The surface quality is not glossy, but a medium-gloss or eggshell finish.

The slow "chalking" of the surface is important, as this assures a continuance of the whiteness, that would otherwise be lost by slow accumulation of a dark-colored film of dirt and dust from the atmosphere. The desired rate of chalking varies with the amounts of dust and soot deposited in the region; in places where the air is relatively clean, a slower rate of chalking is desirable and paint life is thus increased.

Socony Paint Products Co., Metuchen, New Jersey, produce a paint having the desired properties under the name *Sovalex 44-W-3 Tank White*. This company has paint manufacturing facilities also at Beaumont, Texas, and Los Angeles, California (612 S. Flower St.).

The great majority of roofs nowadays are of galvanized metal or asphalted shingles or similar roofing material. The Socony paint may be applied to well cleaned and dry galvanized roofs over a priming coat of zinc-dust (or zinc-dust—zinc-oxide) primer, which is one of the best priming coats for surfaces of galvanized steel. (The special paint is available at paint stores.)

On asphalt shingle roofs the heat-reflecting paint may be applied directly. There may occasionally be a small amount of "bleed through" on asphalt shingles, but it is believed that this should be slight, perhaps hardly noticeable.

There are a considerable number of manufacturers producing zinc-dust—zinc-oxide paints. The consumer may be able to buy a paint of this type from any large paint dealer, but any consumer having difficulty finding a source of supply may write Consumers' Research, sending a reply-paid ready-addressed envelope; the names of a few manufacturing sources in his region will be given in response to the subscriber's request. Consumers can learn by writing the manufacturer where in his neighborhood the paint can be purchased, or if necessary arrange for a shipment from the factory.

The paint said to be most suited for use on asphalt shingle roofs is an acrylic-base water-emulsion coating; it is said that this paint (which is high in price) can be applied to gravel-coated roofs, to sheet aluminum, aluminum-primed asphalt, wood, asphalt shingles, glass,

Advertising we have seen indicates that manufacturers and dealers are going to be selling a lot of people in the near future on the idea of special paints to produce cooler roofs. Some of this advertising is not going to be in the best interests of consumers; one firm offers an aluminum paint as superior for producing a cool roof; yet, as our April 1956 Bulletin shows, aluminum is far inferior in heat reflectance to a flat or glossy white paint. There is also a claim of "20 percent cooler" on the inside of the house, which could be very misleading to some persons. The actual amount by which a house is rendered cooler by the use of paint depends on many things, and it could not be correctly expressed as a percentage anyway. Therefore the homeowner would not know whether the claim had been fulfilled or not. It would be impossible to define the cooling effectiveness of any particular paint in any such simple fashion.

and masonry. One maker of acrylic-base emulsion paint is Coatings Laboratories, Inc., Tulsa, Oklahoma. Socony Paint Products Co., already mentioned, offer an acrylic-emulsion paint, *Socoplex Exterior White 79-W-4*, in one-gallon cans, at $3.25. Paints of this type have the advantage of a very high pigment content and do not dissolve asphaltic material. These two factors act to prevent objectionable discoloration or staining of the paint from the asphaltic material.

We are informed that the Navy makes use of an infra-red-reflecting enamel which comes in several colors and has valuable properties in keeping surfaces and contents of enclosing boxes cool. For military reasons, naval authorities may choose a darker shade to give lower visibility. However, as the most effective paints for heat reflection are those which are white or nearly so, white or the lightest possible tint should be chosen whenever practicable for ultimate consumers' use of paints for heat reflecting purposes. Information on the type of "Hi-Heat Hi-Reflectance" Silicone Paint used by the U.S. Navy for metals, and the surfaces on which it may be used is available from Death Valley Specialties, Inc., Paint Div., P.O. Box 1206, Ventura, California.

A question arises as to the painting of walls of a house for best results in keeping summer temperatures indoors as low as possible. While, in general, heat-reflection coating of the roof is much the more important, it will often be the case that a house with a wall or walls exposed to strong sunlight would be made much cooler if one or two of the walls, as well as the roof, were to be coated with white house paint, rather than a darker color. It is not necessary or desirable to use for the wall of the house one of the special paints discussed in the preceding paragraphs. One of the usual white house paints should be employed, and it should be of the same type—often the same brand—as the paint used for the previous coat on the same house, since a second coat applied over an earlier one of a distinctly different type or formulation may fail earlier than it would have if it had been applied over an undercoating of a type identical or closely similar to itself. The extent to which painting of outside walls is desirable will depend upon the direction in which exposed walls face, the presence or absence of trees and foliage, shade from adjacent buildings, the nature of surroundings, whether grass, bare earth, or concrete.

We believe that, in places where summer heat is a real problem, there will be an increasing tendency to use special white, close-to-white, and light-colored paints and roofing materials to keep houses cooler on hot sunny days. (In winter, of course, the reflection of a large proportion of the sun's heat involves a real disadvantage, in that the heat which is not gained from the sun must be supplied by the heating plant at the cost of higher expenditure for fuel.)

It should be borne in mind that, where air conditioning is used, the saving of electrical energy by the use of heat-reflective painting can be very substantial. By the same token, if the air conditioning system is now just able to handle the cooling load on exceptionally hot days, it might be made to do so easily by use of heat-reflective white paint on the roof and on some of the walls most exposed to the sun.

The homeowner must not, of course, expect the impossible, for an uninsulated galvanized iron roof painted white would still, one expert comments, make a hot attic—an attic probably much hotter than it would be if the roof were of black asphaltic roof covering material laid on a well-insulated roof and with the attic well ventilated. Paint, in other words, will not solve the problem in a location exposed to bright unremitting sunlight where the house is not constructed in a way to provide the best possible conditions during the summer months; the paint may, however, help a good deal in mitigating high temperature problems where other steps have not been taken, or are not practicable.

A further point to remember is that white paints are much less durable than dark paints, and hence will need more frequent renewal. There will also be the possibility that with frequent renewal, the coating may become so thick as to require complete removal for later restoration, and on a roof, this could be a difficult and prohibitively expensive job. White or other paint should not be used on a roof covered with wood shingles, because paint on shingles will impair their durability, increasing the tendency to decay. Thus the problem is one of necessary compromise between need for reduction of heat in the home and the extra cost and difficulty of reducing the high temperature by the use of a paint which at best will not be as durable as might be desired, or may have some other drawback.

Our attention has been directed to the need for having metal roofs thoroughly clean prior to painting. Many contaminants that may be on the surface, such as soot, or greasy or smoky residues, may interfere with paint adhesion and may cause premature failure as well as hasten deterioration by weather conditions.

We shall be glad to hear from subscribers who may have had experience with these problems and to learn how satisfactory they have found the use of light colored paints for purposes of heat reflection.

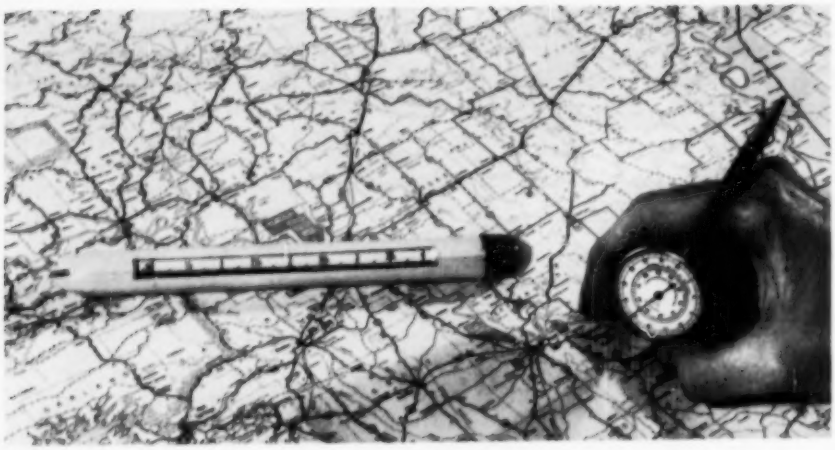

Map reading aids for the motorist

MOTORISTS who frequently travel unfamiliar roads with the aid of maps may make good use of one of the two gadgets pictured. On both devices a small wheel is run over the route to be measured. On the *Selsi*, shown in use above, this little wheel is connected by a train of gears to a pointer which revolves on a dial face and indicates the distance on the map in inches and in centimeters. The reading is converted to miles or kilometers by multiplying by the scale of the map.

On the *Mile-O-Graph*, the measuring wheel is connected to a little pulley which moves a rubber band as a belt. A mark on the rubber band moves past a scale of miles to give the distance. The *Mile-O-Graph* has 30 different scales, ranging from 0.1 mile per inch to 40 miles per inch, on a roll of paper alongside the rubber band. The appropriate scale is brought into position by turning a knob at the end of the *Mile-O-Graph*. For maps having a scale that is not included, the distance may be determined by combining two scales. Thus, for a map with a scale of, say, 22 miles per inch, the *Mile-O-Graph* may be set at 20 miles per inch and a reading obtained. Then the scale is changed to 2 and the reading on that scale, for the same distance, is added to the reading on the 20 scale to get the total distance. Or, if one prefers, the *Mile-O-Graph* scale may be set at 1 mile per inch and the reading multiplied by the scale of the map in miles per inch.

The *Selsi*, using toothed gears to move the indicator, is not subject to such large errors as the *Mile-O-Graph*. With reasonable care in following the route, the map readings can be made consistently to within about 2 percent with the *Selsi*. Much larger errors may be obtained with the *Mile-O-Graph* because the pulley belt stretches, though with care readings can be made to within 5 percent.

The *Selsi* has a compass on the opposite face from the distance dial, to help the motorist find his way. A mechanical pencil is attached to the side of the case. The compass should be used at least several feet away from any car, as the steel in an automobile can produce large errors in compass readings taken in or close to the car.

A. Recommended

Selsi (Made in Western Germany; distributed by Breck's of Boston, 100 Breck Bldg., Boston 10; Cat. No. YT 150) $1.98. Combination map measurer, compass, and pencil in a leather case. Accurate and convenient to use, but requires a simple multiplication to obtain reading in miles. Also available without pencil at $1.89 (Cat. No. YT 119).

B. Intermediate

Mile-O-Graph (Mile-O-Graph, Inc., 165 Broadway, New York 6) $2. Requires more care in use and is not as accurate as the *Selsi*. Eliminates need for multiplication if the map scale is the same as one available on the *Mile-O-Graph*. (The map scale will often match or nearly match one of *Mile-O-Graph's* 30 scales.)

Dangers from swimming pool pumps

(*Continued from page 2*)

waterproof and specially designed for the job. Most electric motors used about the house and in the home workshop are not at all suited to use with a pump or for other purposes in damp or wet places. Such motors, almost any motor, indeed, when exposed to the splashing of water about a pool, can develop high leakage currents which will present a grave danger to the lives of the persons either in the pool or in the immediate vicinity.

Don't assume that you are safe from a shock because you are in the water. If a serious electrical leakage exists, a dangerous shock may be received due to voltage differences between various areas of the water. CR knows of one case where a boy was electrocuted when he touched a pipe while he was swimming in a large lake. Current from a short-circuited motor and pump flowing from the pipe to the boy in the lake and through him to the water about him was sufficient to cause death. (Many people would make the assumption that the water in the lake would have grounded the pipe sufficiently to eliminate all possible danger.)

One type of pump and filter which is made expressly for swimming pools is used right in the pool itself. The whole unit is submerged in the water and is allowed to run to recirculate and filter the water. With this use, a potential hazard may exist to anyone in the pool, similar to the very real hazard which exists when a person in a bathtub accidentally pulls a connected radio or heater into the water with him. Many adults and children have been electrocuted in bathtubs by this very type of accident which put metal carrying the line voltage into direct contact with water in the tub.

The submersible pumps are designed as a sealed unit, and if proper care has been taken in their design, and inspection was very careful and thorough, and nothing occurs subsequently to impair the quality of the insulation, such pumps should present no shock hazard. However, with the probabilities of breakdowns of modern complex appliances in mind, CR's recommendation is that the use of such a submersible pump be avoided or, if one must be used, no one should be in the pool at the time.

The fact that the plastic tank of the pool may insulate the water from ground is no assurance of freedom from all danger of shock, for water has sufficiently high resistance that a dangerous shock could be received by a person in contact with it. For example, in entering or leaving the pool a person will likely touch the ground with one foot while the other is still in the pool, and that act could provide a hazardous flow of current through a person's body. In a well installed and equipped professional swimming pool with a permanently installed filter system, the problem is less serious, since the electrical parts of the filter pumping equipment are usually out of reach of persons using the pool and the system is effectively grounded through the underground connecting pipes to the pool and to the permanent water system of the home, club, or park.

Another possibility of danger lies in the fact that portable pool pumps may in many cases be used at the end of long extension cords. The cords may often be of too small a wire size to supply sufficient voltage to the motor. In such a case, the motor will overheat and the high temperature may very possibly cause a failure of insulation, thus creating a shock hazard because of the abnormal condition to which the motor was subjected. Extension cords themselves constitute a special danger when used in wet or submerged locations.

CR's recommendation to owners of portable swimming pools is that, if the cost of water is not a limiting factor, owing to the size of the pool, the owner should change the water daily or every few days. If the pool is of large size and water is expensive, an electric pump and filter system can be used. *The use of an electric pump should be limited to night hours or to hours when no children or other users can possibly have access to the pool.* The frame of the motor and pump should be securely connected to a good permanent ground (water pipe connected to the city water supply system). Under no circumstances should an electric pump of the portable type be left connected to a live electrical circuit when the pool is in use, *even if the pump switch is in the off position.* In most motor-operated electrical appliances the switch opens only one side of the line, leaving the other side (which may be the "hot" side) connected to the motor. In a swimming pool installation, one should be sure to arrange to have a double-pole switch installed so that *both* sides of the power line are broken whenever the switch is opened.

Information reaching Consumers' Research indicates that Underwriters' Laboratories has not inspected or given the use of its label or "listing" to any swimming pool pumps. On that account, the purchaser should be careful to buy a make that is produced by a well-established firm which is financially and otherwise responsible; this precaution could be vital if an accident or injury should occur.

Off the editor's chest

(*Continued from page 5*)

usually posed a serious obstacle to the evaluation and rating of products by brand name. In the last few years, however, a project with a somewhat different approach in obtaining and circulating general buying information and advice to British consumers has been successful. This undertaking was initiated by the British Standards Institution in 1955 in setting up an Advisory Council on Standards for Consumer Goods together with the Women's Advisory Committee of the B.S.I. to obtain the cooperation of manufacturers in making products according to B.S.I. standards and indicating that fact on the label. Another objective was to evolve a system of informative labeling.

One of the British Council's functions has been to find out what consumers want and expect in certain products and what kinds of defects they chiefly encounter in products currently available. The Council circulated an interesting questionnaire called the "Labelling Quiz" asking women to list in order of importance certain items of information that they would like to find on the labels of a number of products including blankets, carpets and carpeting, children's clothing, and fabrics. Several small leaflets giving general information on what to look for in buying particular items have also been distributed, as well as "A Quarterly Review for Women" and a "Shoppers' Guide" that lists the brands or makes that carry the "Kite mark" as a guarantee that they are manufactured in conformance with B.S.I. standards, and those which carry a British Standard number, indicating that the manufacturer claims to have complied with the relevant specifications. Cooperation of manufacturers with the B.S.I. is on a voluntary basis.

Another interesting development in promoting consumers' interests is making progress in the Scandinavian countries. Both Norway and Sweden have a special minister for consumers in the government. Denmark has an effective Consumers' Council for Housewives which works with the Domestic Science Council, a government body, in testing household goods and rating them for quality. The Danish Council has published six Buying Guides; and, as the result of its recommendations and suggestions, a number of manufacturers have made changes in design and improvements in quality of their products. The Council also has a complaint department that helps consumers with various problems.

Besides having a Minister of Consumers' Welfare in the cabinet, Sweden has a Home Research Institute, a government-subsidized agency, that aims to improve design and quality of articles used in the home and to give homemakers effective information on home economics and homemaking methods. Another Swedish institution that plays an important role in educating consumers is the Bureau of Informative Labelling, which develops standards, tests products for conformance with those standards, and encourages manufacturers to label their products according to its specifications. Its studies, methods, and test results are published in both Swedish and English. In a typical publication of HFI (Hemmens Forskningsinstitut, now Statens institut för konsumentfragor), is a discussion of whether it pays to bake at home, the amount of vitamin C loss in orange juice exposed to sunlight, and what should appear on labels.

Norway has only recently established a Minister for Family and Consumer Affairs that cooperates closely with the Norwegian Consumers' Council. The latter is set up as an independent institution, but it is financed by the state. It is made up of representatives of five women's organizations, one from The National Trade Union Federation, and one from the Norwegian Cooperative Union and Wholesale Society. The Council is mainly concerned with prices, quality, and measures affecting health and hygiene. It carried out a marketing research study on the prices and quality of Norwegian fruit and eggs that resulted in an improved grading system, with price variations based on quality and size.

Complaints, as well as requests and suggestions, can be submitted to the Norwegian Consumers' Council by the individual consumer. Usually the handling and outcome of such cases are discussed in the public press. The resulting publicity is often effective in saving other consumers from making the same mistakes.

The Consumers' Council also publishes a monthly report which is sent principally to the press, broadcasting companies, and interested organizations, although individual consumers may also subscribe to it. One of its most useful pieces of research was an informative study of the different washing machines on the Norwegian market undertaken in cooperation with the State Housekeeping Research Council. Small informative Buying Guides giving general buying information as well as advice on how to buy meat correctly have been published. In process are guides on paint and varnish, kitchen utensils, and textiles. These Guides are sold on newsstands and in book stores.

It is pleasant to see that a number of countries are giving recognition to the importance of the consumer to a nation's prosperity.

Ratings of Motion Pictures

THIS section aims to give critical consumers a digest of opinion from a wide range of motion picture reviews, including the motion picture trade press, leading newspapers and magazines—some 19 different periodicals in all. The motion picture ratings which follow thus do not represent the judgment of a single person, but are based on an analysis of critics' reviews.

The sources of the reviews are:

Boxoffice, Cue, Daily News (N. Y.), *The Exhibitor, Films in Review, Harrison's Reports, Joint Estimates of Current Motion Pictures, Motion Picture Herald, National Legion of Decency, Newsweek, New York Herald Tribune, New York Times, The New Yorker, Parents' Magazine, Release of the D. A. R. Preview Committee, Reviews and Ratings* by the Protestant Motion Picture Council, *The Tablet, Time, Variety* (weekly).

The figures preceding the title of the picture indicate the number of critics whose judgments of its entertainment values warrant a rating of A (recommended), B (intermediate), or C (not recommended).

Audience suitability is indicated by "A" for adults, "Y" for young people (14-18), and "C" for children, at the end of each line.

Descriptive abbreviations are as follows:

adv—adventure
biog—biography
c—in color (Ansco, Eastman, Technicolor, Trucolor, Warner Color, etc.)
car—cartoon
com—comedy
cri—crime and capture of criminals
doc—documentary
dr—drama
fan—fantasy
hist—founded on historical incident
mel—melodrama
mus—musical
mys—mystery
nov—dramatization of a novel
rom—romance
sci—science fiction
soc—social-problem drama
trav—travelogue
war—dealing with the lives of people in wartime
wes—western

A	B	C		
—	7	1	**Abandon Ship! (British)**	*dr A*
—	10	3	**Above Us the Waves (British)**	*war-dr AYC*
—	3	2	**Accused of Murder**	*cri-mel-c A*
—	2	2	**Affair in Reno**	*mel-c A*
—	1	3	**African Manhunt**	*mel A*
1	12	2	**Albert Schweitzer**	*biog-c AYC*
5	7	4	**Anastasia**	*dr-c AYC*
—	1	4	**Angels of Darkness (Italian)**	*dr A*
—	3	2	**Attack of the Crab Monsters**	*sci AY*
—	9	9	**Baby Doll**	*dr A*
2	9	6	**Barretts of Wimpole Street, The**	*dr-c A*
1	5	9	**Batchelor Party, The**	*dr A*
2	13	2	**Battle Hymn**	*biog-c AYC*
—	—	3	**Beautiful But Dangerous**	*dr A*
—	3	2	**Beyond Mombasa (British)**	*mel-c AY*
—	8	8	**Big Boodle, The**	*cri-mel A*
—	5	4	**Big Caper, The**	*cri-mel A*
—	2	3	**Big Fun Carnival, The**	*car AYC*
—	8	7	**Big Land, The**	*wes-c AYC*
—	—	3	**Bitter Spears**	*doc-dr-c A*
—	1	9	**Black Whip, The**	*wes A*
—	2	7	**Blonde Sinner, The (British)**	*dr A*
1	8	2	**Boy on a Dolphin**	*mel-c A*
1	3	2	**Brass Legend, The**	*wes A*
1	12	4	**Bundle of Joy**	*mus-com-c A*
—	3	4	**Buster Keaton Story, The**	*biog AYC*
—	2	3	**Counterfeit Plan, The (British)**	*cri-mel A*
—	3	10	**Crime of Passion**	*mel A*
—	4	4	**Cruel Tower, The**	*mel A*
—	3	8	**Curucu, Beast of the Amazon**	*mel-c A*
—	3	9	**Dance With Me Henry**	*com AYC*
—	2	2	**Daniel Boone, Trail Blazer**	*wes-c AYC*
—	1	4	**Deadliest Sin, The (British)**	*cri-mel A*
—	2	4	**Deadly Mantis, The**	*sci AYC*
—	8	5	**Death of a Scoundrel**	*mel A*
—	2	8	**Delinquents, The**	*soc-dr A*
2	5	4	**Designing Woman**	*com-c A*
—	3	8	**Desperadoes Are in Town, The**	*mel A*
1	4	2	**Devil's General, The (German)**	*war-dr A*
—	4	9	**Don't Knock the Rock**	*mus-com AYC*
—	6	4	**Drango**	*mel A*
—	3	1	**Duel at Apache Wells**	*wes AYC*
1	10	5	**Edge of the City**	*mel A*
—	—	6	**8 x 8**	*fan-c A*
—	8	3	**Everything But the Truth**	*com-c AYC*
5	10	3	**Fear Strikes Out**	*biog AYC*
—	1	2	**Fighting Trouble**	*com A*
—	7	1	**Finger of Guilt (British)**	*mys-mel A*
—	4	6	**First Traveling Saleslady, The**	*mus-com-c AYC*
—	8	5	**Five Steps to Danger**	*mys-mel AYC*
—	—	5	**Flesh and the Spur**	*wes-c A*
—	2	9	**Four Boys and a Gun**	*soc-dr A*
—	8	6	**Four Girls in Town**	*com-c A*
2	13	3	**Full of Life**	*com A*
8	9	1	**Funny Face**	*mus-com-c AYC*
—	5	1	**Fury at Showdown**	*wes A*
—	3	—	**Garment Jungle, The**	*doc-dr A*
1	8	6	**Girl Can't Help It, The**	*mus-mel-c A*
—	1	3	**Girl in the Kremlin, The**	*mel A*
—	1	2	**Glass Tomb, The (British)**	*dr A*
—	9	3	**Gold of Naples, The (Italian)**	*dr A*
—	5	5	**Great American Pastime, The**	*com AYC*
3	10	4	**Great Man, The**	*dr A*
—	11	2	**Gun for a Coward**	*wes-c AYC*
—	3	4	**Gun the Man Down**	*wes A*
—	3	1	**Gunfight at the OK Corral**	*wes-c A*
—	8	3	**Guns of Fort Petticoat, The**	*wes-c AYC*
—	5	5	**Halliday Brand, The**	*wes A*
—	8	—	**Happy Road, The**	*com AYC*
6	9	1	**Heaven Knows, Mr. Allison**	*war-dr-c AYC*
—	3	2	**Hellcats of the Navy**	*war-dr AYC*
—	2	1	**Hell's Crossroads**	*wes-mel A*
—	2	3	**High Terrace (British)**	*mys-mel A*
—	1	4	**Hit and Run**	*cri-mel A*
—	1	2	**Hold That Hypnotist**	*com AYC*
—	6	9	**Hollywood or Bust**	*mus-com-c A*
—	1	3	**Hot Shots**	*com A*
—	2	8	**Hot Summer Night**	*cri-mel A*
—	5	1	**If All the Guys in the World**	*dr AYC*
—	8	6	**Incredible Shrinking Man, The**	*sci-fan AYC*
—	3	12	**Iron Petticoat, The**	*com-c A*
—	3	1	**Iron Sheriff, The**	*wes A*
—	8	6	**Istanbul**	*mys-mel-c A*
—	1	2	**It Conquered the World**	*sci AY*
—	1	2	**Jail Busters**	*cri-mel A*
—	8	2	**Kelly and Me**	*mus-com-c AYC*
—	2	13	**King and Four Queens, The**	*wes-c A*
—	3	—	**King of the Coral Sea (Australian)**	*mel AYC*
—	4	—	**Kronos**	*sci AYC*
—	9	3	**La Sorcière (French)**	*fan A*
—	4	5	**Last Man to Hang, The (British)**	*cri-mel A*
—	8	—	**Last of the Badmen**	*wes-c AYC*
—	3	4	**Living Idol, The**	*adv-c A*
—	4	14	**Lizzie**	*dr A*
3	9	3	**Lost Continent, The (Italian)**	*trav-c A*

A	B	C		
—	5	14	**Love Me Tender**	*wes A*
2	9	5	**Magnificent Seven, The (Japanese)**	*dr-c A*
—	6	5	**Man Afraid**	*cri-mel AYC*
—	—	3	**Man Beast**	*sci-mel A*
—	1	8	**Man in the Vault**	*mys-mel A*
—	1	3	**Man is Armed, The**	*cri-mel A*
—	1	8	**Man Who Turned to Stone, The**	*cri-mel A*
1	11	6	**Men in War**	*war-dr A*
—	7	6	**Mister Cory**	*mel-c A*
—	2	8	**Mole People, The**	*sci AYC*
—	8	1	**Naked Eye, The**	*doc-c A*
—	5	1	**Naked Paradise**	*mys-mel-c A*
—	2	2	**Nana (French)**	*dr-c A*
—	1	8	**Night Runner, The**	*cri-dr A*
—	9	6	**Nightfall**	*mys-mel A*
—	4	—	**Not of this Earth**	*sci A*
—	2	6	**Oasis (French-German)**	*adv-c A*
1	9	2	**Oedipus Rex**	*dr-c A*
—	11	6	**Oh, Men! Oh, Women!**	*mus-com-c A*
—	5	2	**On the Bowery**	*doc A*
—	4	5	**Pantaloons (French)**	*com-c A*
—	1	13	**Paris Does Strange Things (French)**	*com-c A*
—	1	3	**Passport to Treason**	*mys-mel A*
—	3	4	**Peacemaker, The**	*wes AYC*
—	3	4	**Phantom Stagecoach, The**	*wes AYC*
—	—	10	**Pharaoh's Curse**	*mys-mel A*
1	5	1	**Public Pigeon No. 1**	*com-c AYC*
—	6	4	**Quiet Gun, The**	*wes A*
—	4	1	**Rack, The**	*war-dr A*
5	9	4	**Rainmaker, The**	*dr-c A*
2	4	—	**Reach for the Sky (British)**	*war-dr AYC*
6	6	—	**Red Balloon, The (French)**	*fan-c AYC*
—	6	2	**Revolt at Fort Laramie**	*wes-c AYC*
—	1	9	**Ride the High Iron**	*dr A*
—	3	10	**River's Edge, The**	*cri-mel-c A*
—	4	7	**Rock, Pretty Baby**	*mus-com A*
—	3	5	**Rock, Rock, Rock**	*mus-com AYC*
—	4	5	**Royal Affairs in Versailles (French)**	*dr-c A*
—	3	8	**Rumble on the Docks**	*cri-mel A*
—	2	4	**Runaway Daughters**	*dr A*
—	4	5	**Running Target**	*mel-c A*
—	2	3	**Scandal, Inc.**	*cri-mel A*
4	5	2	**Seven Wenders of the World**	*trav-c AYC*
—	8	1	**Shadow on the Window, The**	*cri-mel A*
—	1	4	**Shake, Rattle and Rock**	*mus-dr AY*
—	2	4	**She Devil**	*sci A*
—	—	3	**She-Creature, The**	*sci-mel A*
—	6	1	**Shoot-Out at Medicine Bend**	*wes AYC*
—	3	1	**Sierra Stranger**	*wes A*
—	3	1	**Silken Affair, The (British)**	*com A*
—	5	10	**Slander**	*cri-mel A*
1	7	2	**Smiley (Australian)**	*dr-c AYC*
8	8	1	**Spirit of St. Louis, The**	*biog-c AYC*
—	2	5	**Spring Reunion**	*dr A*
—	4	3	**Storm Rider, The**	*wes AYC*
—	—	3	**Strange Adventure**	*cri-mel A*
—	6	10	**Strange One, The**	*soc-dr A*
—	7	2	**Suicide Mission (British)**	*war-mel AYC*
—	1	2	**Swamp Women**	*cri-mel-c A*
—	6	1	**Tall T, The**	*wes-c A*
—	6	3	**Tarzan and the Lost Safari (British)**	*adv-c AYC*
—	7	8	**Tattered Dress, The**	*cri-mel A*
—	10	3	**Tears for Simon (British)**	*cri-mel-c AYC*
—	—	5	**Tel Aviv Taxi (Israeli)**	*com A*
—	2	2	**Tempest in the Flesh (French)**	*dr A*
—	8	8	**Ten Thousand Bedrooms**	*mus-com-c AYC*
1	4	1	**This Could be the Night**	*mus-com A*
3	4	9	**Three Brave Men**	*propaganda-dr A*
—	9	4	**Three Violent People**	*wes-c A*
—	2	2	**Thunder Over Arizona**	*wes-c AYC*
—	3	3	**Tomahawk Trail**	*wes A*
—	10	8	**Top Secret Affair**	*com A*
—	7	9	**True Story of Jesse James, The**	*wes-c A*
3	10	1	**12 Angry Men**	*dr A*
—	1	4	**Undead, The**	*fan A*
—	3	4	**Untamed Youth**	*mus-mel A*
—	4	7	**Utah Blaine**	*wes A*
1	3	2	**Vintage**	*dr-c A*
—	—	7	**Voodoo Island**	*cri-mel A*
—	—	6	**Voodoo Woman**	*mel A*
—	—	3	**Walk the Dark Street**	*mel A*
—	4	1	**War Drums**	*mel-c AYC*
2	3	5	**We Are All Murderers (French)**	*dr A*
—	9	3	**Westward Ho the Wagons**	*wes-c AYC*
—	4	6	**Wicked as They Come (British)**	*dr A*
—	1	12	**Wild Party, The**	*cri-mel A*
2	9	7	**Wings of Eagles, The**	*war-dr-c AYC*
—	1	7	**Woman of Rome (Italian)**	*dr A*
—	4	9	**Woman's Devotion, A**	*mys-mel-c A*
—	—	8	**Women of Pitcairn Island**	*mel A*
1	7	6	**Written on the Wind**	*dr-c A*
1	9	7	**Wrong Man, The**	*mys-mel AY*
—	2	2	**X the Unknown (British)**	*mel AYC*
—	2	2	**Yaqui Drums**	*wes AYC*
—	—	3	**Yellowneck**	*mel-c A*
2	14	—	**Young Stranger, The**	*dr AYC*
—	5	10	**Zarak**	*mel-c A*
—	3	6	**Zombies of Mora-Tau**	*fan A*

* * *

Reissues (oldtimers you may have seen before) as previously rated in the CR Bulletin indicated:

9	9	—	**Annie Get Your Gun (Nov. '50)**	*mus-com-c A*
1	5	9	**April in Paris (June '53)**	*mus-com-c A*
4	10	3	**Bend of the River (Aug. '52)**	*wes-c AYC*
4	13	—	**Big Sky, The (Feb. '53)**	*wes-mel A*
4	11	1	**Broken Arrow (Jan. '51)**	*dr-c AYC*
1	11	5	**Buffalo Bill (Nov. '44)**	*wes-biog-c AYC*
—	7	5	**Carson City (Nov. '52)**	*wes-mel-c AYC*
9	9	—	**Cinderella (July '50)**	*mus-car-c AYC*
4	11	1	**Crash Dive (Dec. '43)**	*war-mel-c AY*
4	7	5	**Cyrano de Bergerac (June '51)**	*dr A*
—	9	3	**Dallas (July '51)**	*wes-c A*
—	8	5	**Distant Drums (July '52)**	*war-mel-c A*
7	4	3	**East of Eden (Sept. '55)**	*dr-c A*
5	11	1	**Gaslight (Feb. '45)**	*mys-mel A*
1	4	10	**Green Dolphin Street (June '48)**	*dr AY*
1	12	3	**Guy Named Joe, A (Aug. '44)**	*war-dr A*
6	10	2	**High Noon (Dec. '52)**	*wes A*
1	2	7	**Ivanhoe (Jan. '53)**	*nov-c AYC*
2	13	1	**Killers, The (April '47)**	*cri-mel A*
1	9	4	**Larceny (April '49)**	*mel A*
—	15	1	**Lusty Men, The (May '53)**	*mel A*
12	4	2	**Mister Roberts (Dec. '55)**	*war-com-c A*
—	10	6	**One Minute to Zero (Feb. '53)**	*war-mel A*
—	1	7	**1,000 Years from Now (Captive Women, May '53)**	*sci A*
—	5	12	**Postman Always Rings Twice, The (Oct. '46)**	*cri-dr A*
—	11	7	**Rawhide (Sept. '51)**	*wes A*
18	—	—	**Rebecca (Di. June '40)**	*nov A*
1	9	8	**Rebel Without a Cause (June '56)**	*soc-mel-c A*
—	4	6	**Shakedown (April '51)**	*cri-mel A*
—	11	5	**Sleeping City, The (Jan. '51)**	*cri-mel A*
9	6	2	**Spellbound (June '46)**	*dr A*
4	14	—	**Stratton Story, The (Nov. '49)**	*dr AYC*
—	9	5	**Streets of Laredo (Oct. '49)**	*wes-c A*
2	11	1	**Tall in the Saddle (July '45)**	*wes AYC*
10	6	—	**Taproots (March '49)**	*dr-c A*
—	11	3	**Ten Tall Men (June '52)**	*war-dr-c A*
9	6	—	**Third Man, The (July '50)**	*cri-mel A*
2	9	4	**Three Musketeers (May '49)**	*dr-c AY*
1	13	2	**To the Ends of the Earth (Sept. '48)**	*doc-mel AY*
1	10	4	**Two Years Before the Mast (April '47)**	*adv AYC*
—	8	7	**Unconquered (June '48)**	*hist-c A*
—	10	2	**Walk A Crooked Mile (Apr. '49)**	*mel A*
1	11	5	**Whispering Smith (July '49)**	*mel-c AY*
7	10	—	**Yearling, The (May '47)**	*dr-c AYC*

The Consumers' Observation Post

(Continued from page 4)

THE SAFETY ANGLE IN CAR DESIGN needs greater emphasis, both in the United States and abroad. In a letter to the British Medical Journal early this year, the increasing popularity of small, low, and lightly constructed cars was deplored. The physician writing the letter observed that his many years of hospital experience had shown that good car design and solid construction were important factors for the driver's safety. He recommended four good wheels, a few feet of steel between the driver and what he would hit in a head-on collision, a stoutly constructed body as protection against injury in sideswipe accidents and overturning, splinterproof glass, and a car design that gives the driver a good view of the road ahead. Since this year's road-hugging models in the United States do not appear to be selling as well as their designers would like, perhaps a change toward improved safety in design would be in order.

* * *

MUCH FROZEN FISH has no more flavor than household paraffin, comments a food editor in The New York Times. To remedy this situation, she recommends heat-and-serve frozen fish dishes in various sauces, including cheese, mushroom, tomato, and lemon-butter. How good the consumer will find such products when they are served at home will depend on how well they have been kept under refrigeration enroute to and in the supermarket's frozen-food storage cabinets.

* * *

HOW LONG SHOULD A RUG OR CARPET BE EXPECTED TO LAST? Two suggestions on how to arrive at a proper estimate have been made by Harry Gross, president of Lincoln Rug Co., Newark, N. J. The simpler method, based on an average life expectancy of eight years for a rug or carpet, figures depreciation at 25 percent for the first year, 15 percent for the second year, and 10 percent per year for the next six years. Another approach offered by Mr. Gross figures depreciation on the basis of the original price of the rug. Carpets selling at $3.95 to $6.95 per yard are given a life expectancy of three years; those at $7.95 to $9.95 may have a five-year life; those at $10.95 to $12.95 have an estimated seven years; and rugs priced at $13.95 to $20.95 per yard are estimated to have a life of 10 years. The National Institute of Rug Cleaners suggests that the use of these tables in selling new rugs will combat the impression that carpets and rugs last forever. One of the main reasons given for persuading the carpet trade to inform consumers on the probable wear life of the rugs and carpets is that no other household textile is expected to be walked on and to remain in place for many years without regular and thorough cleaning. Consumers who are in the market for new rugs may wish to ask their dealers for an estimate of the life expectancy of those they are considering.

* * *

INCREASING TROUBLE WITH BEAD LEAKS ON 14-INCH TIRES is plaguing the tire makers. Automotive News reports the situation is becoming so critical that most manufacturers are refusing to make warranty adjustments on tires that have been damaged by improper mounting or dismounting procedures. The manufacturers claim that servicemen and car owners frequently cause damage by demounting the tire from the wrong side and failing to use soap to lubricate the rims. When the bead of a tubeless tire is damaged or even scratched, the chances are it will become a chronic "leaker" and can never be satisfactorily used as a tubeless tire again, although it may perhaps be usable with an inner tube.

* * *

THE CONSUMPTION OF FROZEN ORANGE JUICE took a drop last year for the first time in the industry's history. High prices for oranges and the poor quality of Florida oranges were held responsible. Cold weather affected the flavor of the fruit, according to one trade leader.

PARAKEETS should not be kept in cages in the corridors of hospitals. In answer to an inquiry, the Journal of the American Medical Association points out that the psittacosis virus is present in the nasal secretions and droppings of the birds. It gets onto their feathers and contaminates the cages and may contaminate food and bed linen of patients in the vicinity where attendants handle the birds and then attend to patients without proper disinfection.

* * *

STYLE AND COMFORT in women's shoes are not synonymous--as every woman knows. Dr. Henry Feffer, podiatrist, suggests that a woman should have one pair of shoes for comfort and one for style. To bring the two together into one is an impossible task. In order to get women, particularly older women, into properly fitted shoes, he sadly admitted that style had to be sacrificed, but he pointed out that women cannot keep on abusing their feet and expect to have foot comfort.

* * *

CHEESE FOODS AND CHEESE SPREADS should be so labeled so that the consumer does not mistake them for real cheese. That is the recommendation of a committee on milk and dairy products of the Association of Food and Drug Officials. Furthermore, the committee comments that skim milk cheese or part-skim-milk cheese should be clearly identified. This suggestion will be quite welcome to those who are looking for low-fat milk products.

* * *

THE FUR-TYPE PILE FABRICS often cause trouble for the dry cleaner. The National Institute of Drycleaning reports that considerable difficulty has been experienced by the industry in cleaning jackets with a 100 percent Dynel fur-type fabric collar, particularly when the collar is heavily soiled. In part, the difficulty may be due to neoprene, a synthetic rubber, used as a coating to the knit-pile Dynel fabric to give it stability. In time, neoprene, unless carefully formulated, breaks down from oxidation, giving off sufficient hydrochloric acid to cause fabric deterioration. Some of the jackets studied by the N.I.D. were cleaned in the spring and stored over the summer months. When the garments were put on in the fall, the shoulder and sleeve areas ripped and tore, and the sewing thread often broke on the exposed areas.

* * *

HOSPITAL CLEANLINESS leaves much to be desired these days. Dr. Carl Walter, associate professor of surgery at Harvard Medical School, reports an alarming increase in recent years in the number of patients who have contracted serious infections while undergoing hospital treatment. He charges that too much reliance is being placed on the new antibiotics and too little on old-fashioned cleanliness to control infections.

* * *

CAREFUL READING OF THE LABELS of processed meat and sausage products indicates the wide use of nitrates and nitrites. Federal regulations permit the use of up to 200 parts per million of nitrites in meat products for human consumption. They are used primarily for their color-fixing properties, although they also have some value as a preservative. There are those who hold that people with delicate digestive systems are wise to avoid any products containing these chemicals. Their potential danger to health has been demonstrated in inadvertent overdosages in a number of cases. The Louisiana State Department of Health has reported 10 cases of methemoglobinemia that occurred near New Orleans, La., in October 1955. The illnesses were all traced to the eating of wieners and bologna that contained excessive amounts of sodium nitrate and sodium nitrite that had apparently been put into the meat products in error. Following this outbreak, a similar incident was reported in Florida where a 15-month-old girl became ill and a four-year-old boy died after eating uncooked wieners. Louisiana officials emphasized the importance of making all employees in meat plants aware of the danger of careless handling of nitrate and nitrite chemical additives.

Cumulative Index for Consumer Bulletins

January 1957 (Vol. 39, No. 1)

through

June 1957 (Vol. 39, No. 6)

Single copies of Consumer Bulletin are available, at 40 cents.

Entries marked (*) are longer or more comprehensive items.

Month and Page

Air compressor for the home workshop* ... June...23
Air conditioner, buying a room* ... May...22
Air conditioners of adequate capacity, selection ... Feb...14
Amplifiers, audio* ... Apr...15
Antibiotics
  danger of indiscriminate use ... Apr...4
  in food ... Jan...33, 34; Apr...34
Appliances, colored, popularity waning ... Apr...4
  electrical, UL approval important ... May...3
  servicing ... Jan...2*; Apr...33
Automobiles, 1957
  Chevrolet, Ford, Plymouth* ... Feb...5
    safety aspects* ... Jan...21
  Mercury, Oldsmobile, Buick* ... Mar...15
  Rambler, Cadillac, Pontiac* ... Apr...23
  Dodge, DeSoto, Chrysler Windsor; with 2-page data table on 45 cars; prices, the horsepower race, safety, standard transmissions vs. automatic transmissions, power brakes and power steering* ... May...5
Automobiles
  accidents, reducing the severity of injuries ... May...17
  air conditioners, limitations ... May...34
  brake fluids, sub-standard, sold in some sections ... May...4
  brakes, change in design expected ... Apr...3
  cost of operation ... June...9
  design, safety angle needs greater emphasis ... June...31
  license taxes graduated according to horsepower, proposal ... June...4
  manufacturing snags ... Jan...4
  price "packing" ... May...3
  safety belts ... Jan...3, 22; Mar...23*
  station wagons, increased popularity ... Mar...3
  tar removers, harmful to some finishes ... Jan...33
  tires, tubeless, increasing trouble with leaks ... June...31

Bread prices, U.S. vs. Canadian ... Mar...3

Cake mixes, economy in use ... Jan...4
Cameras
  book for photographers reviewed* ... May...2
  35 mm.* ... June...6
  twin-lens reflex* ... June...7
Can openers* ... Feb...11
Carpets, advertising should clearly disclose the content ... Mar...4
  buying on a trade-in basis ... Mar...3
  pricing by the square foot ... Feb...33
  probable wear life ... Jan...3; June...31
  tufted, rubber or latex backing presents cleaning problem ... Apr...3
Cheese foods and spreads, labeling ... June...32
Chicken, canned and frozen, prices ... May...33
China, open-stock patterns, availability ... June...3
Cigarette lighter, new type* ... June...19

Month and Page

Cigarettes, American, arsenic content higher ... Apr...3
  filter-tip, effect on tobacco quality ... Mar...14
Clothesbrushes, brass-wire bristles ... Feb...14
Clothing, rising prices ... Feb...3
Coal-tar dyes in food ... May...3
Consumer bureaus in foreign countries* ... June...5
Consumers, and the mounting cost of living; booklet reviewed ... Apr...33
Consumers aided by competition in manufacturing and research* ... Feb...2
Cookware, prices upgraded in house-to-house selling ... May...3
Corned beef, lower quality ... Apr...34
Coronary thrombosis, treatment with new anticoagulant drugs ... Mar...34

Dandruff, preparations for treating ... May...33
Dental caries, eating hard crunchy foods a preventive measure ... Apr...3
Dentifrices, fluoridated ... Feb...3
Dermatitis of the hands, chlorine a cause ... Mar...3
Diet, factor in causing kidney and bladder stones ... Jan...4
  fatty, as a cause of heart disease ... Jan...34; May...33
  high-quality protein for adolescents ... June...3
Dinnerware, effect of detergents on overglaze ... Apr...34
Doctors, as regarded by patients ... Mar...33
Dogs, traveling by car, leaflet reviewed ... May...34
Dresses, taffeta, effects of dry cleaning ... Mar...4
Drug, with "royal jelly," "miracle ingredient" ... May...4
Drugs, dangers in vending machines and attractive bottles ... Mar...4
Drugs and medicines, box for safer storage ... Apr...34

Editorial* ... each issue

Fabrics, fur-type pile, dry-cleaning problem ... June...32
Film, color, high-speed, and new size* ... June...14
  processing ... Jan...3; 34
Fireplaces can be inefficient ... Feb...25
Fish, frozen, lacking in flavor ... June...31
  tropical, hobby* ... Jan...19
Fluoridation, disadvantages and potential dangers, book reviewed ... June...3
Foods, frozen, temperature control ... Jan...3; Apr...33
Foot warmer, rubber mat* ... Feb...18
Freezer, chest-type* ... Jan...27
Freezer capacities, actual vs. claimed* ... Jan...27
Furnace cleaning, salesmen's racket ... Feb...4
Furniture, aluminum, deterioration in quality ... June...4
  construction, faulty ... May...33
  upholstered, fabric quality control ... Feb...4

Gardening, sales rackets* ... Mar...2
Gas cooking units, built-in* ... Mar...8; Apr...20
Gasoline, vagueness of advertising ... Feb...29
Gasoline savers, increased popularity in Great Britain ... May...34

Month and Page

Grass, Meyer Zoysia ... June...4
seed, illustration on box can be misleading ... May...3
Grocery sales, effect of government distribution of surplus foods ... Feb...4

Hair, superfluous, removal by home electrolysis treatments ... Mar...3
Hand creams and lotions, water content needed ... Feb...3
Hand lotion in new form ... Jan...34
Hazard, electrical shock, booklet reviewed ... June...15
High-fidelity servicing problems ... Feb...30
Highway safety problems ... Feb...33
Home building, translucent panels* ... May...29
valuable hints for greater safety* ... Apr...18
Hormone treatment of livestock ... May...4
Household chemicals, potentially harmful, better la[illegible] needed ... Feb...4

Infec[illegible]ns, lack of hospital cleanliness a factor ... June...32
Insect repellent, new ... June...4
Insecticides, highly toxic, and hazardous to consumers ... Jan...34
Instalment buying ... Feb...34
Irons, steam, care ... May...27

Labeling system developed in Sweden ... Mar...33
Lawn mowers, power, safety precautions ... Mar...4
Lawns, use of polyethylene in re-seeding ... Mar...34
Lighter, cigarette, new kind* ... June...19
Lights for motorists, emergency* ... Apr...18
Linen garments, shrinkage ... Apr...33

Map reading aids for motorists* ... June...26
Meat, consumption, more beef than pork ... May...34
processed, use of nitrates and nitrites in excessive amounts hazardous ... June...32
Meat and poultry in the refrigerator, loose wrapping desirable ... Apr...4
Milk, higher prices wanted by some dairymen ... Feb...34
Mortgages, long-term vs. short-term ... May...34
Moth balls, serious hazard to children ... Feb...33
Motion pictures* ... each issue
Moving, practical advice, booklet reviewed ... Apr...4

Orange juice, frozen, decreased consumption ... June...31
Oranges, artificially colored, banned in Canada ... Feb...3
Oven cleaners* ... Mar...5

Paint, from old stock ... Mar...28
light colored, for roofs* ... June...24
on galvanized metal roofs* ... May...28
Painting concrete* ... Mar...28
Painting the house (repainting)* ... Jan...14
Parakeets in hospital corridors, undesirable ... June...32
Peanut butter with hydrogenated oil ... June...4
Poisoning from lead in colored drinking glasses ... Mar...4
Poultry, hormone treated, necks should not be eaten ... Mar...33
Projectors, slide* ... Jan...16; June...8
Pumps, swimming pool, dangers* ... June...2

Rainboots for women* ... Apr...13
Record players* ... June...16
Records, phonograph* ... each issue
Rubbers, men's* ... May...26
Rugs, *see* Carpets

Month and Page

Scales, postal* ... Feb...23
Screw drivers* ... June...20
Seat belts, automobile ... Jan...3, 22; Mar...23*
Sewage disposal for homes* ... Feb...19
Sewing, home, increased interest ... Mar...33
Shirts, Dacron-cotton, washing ... Apr...3
Shoes, women's, style and comfort not synonymous ... June...32
Slacks, boys' wash-and-wear* ... May...18
Slide projectors* ... Jan...16; June...8
Slides, color, new fast film and cameras for* ... June...14
Smog, effect on colored clothes ... May...34
Spectacles, pinhole* ... Feb...26
Strollers, and stroller-walker combinations* ... Apr...5
Suits, men's, alteration charges ... May...4
Sunglasses, indoor use not recommended ... June...3

Taxes, soak-the-motorist, opposed in New Jersey and Pennsylvania ... May...33
Television and radio service shops, attempts to minimize competition ... Jan...33
Television receivers, 1957* ... Jan...25
Television tubes, defective, reprocessing and reselling racket ... Feb...33
Toilet soaps, synthetic detergent bars, problems of skin irritation ... Jan...33
Touring service, European, roadside messages for motorists ... Jan...4
Toy, plastic, labeling ... Mar...7
Trailers, house* ... Apr...9; June...10
Travelers, luggage through customs ... Feb...3
Traveling abroad, dietary precautions ... Apr...4
Traveling by car, information sources* ... Apr...2
Trees and shrubs, protecting from damage by rabbits ... Feb...22

Vacuum cleaners* ... Feb...13
Varnish, marine* ... Feb...12
Vegetables, canned, insecticides affect flavor ... Mar...3
Vitamin intake, excessive, can be dangerous ... Apr...34

Warranties, household appliances, manufacturers' tax problems ... May...4
Washer-dryer combinations, automatic* ... Jan...11
Washing machines, automatic* ... Jan...5
life expectancy ... Feb...33
washing procedures ... Mar...13*, 33
Weed killers, chemical, care needed in use ... Mar...34
Wrenches, "dog-bone" type* ... Mar...29

X-radiation, dangers to health ... Jan...4; May...34

• • •

Corrections to Consumer Bulletin articles
blenders, electric (Dec. '56) ... Apr...19
detergents, laundry (Oct. '56) ... Jan...18
dictation equipment (Dec. '56) ... Mar...27
motion picture cameras and equipment (Annual '56-'57) ... Mar...27
television receivers (Dec. '56) ... Jan...18
thermometer, dial, fever (Oct. '56) ... Jan...18
trailers, preliminary report (Sept. '56) ... Apr...19
typewriters, portable (Nov. '56) ... Feb...27; May...28
washing machines, automatic (Jan. '57) ... Mar...27

Phonograph Records

BY WALTER F. GRUENINGER

Please Note: The first symbol applies to quality of interpretation, the second to fidelity of recording.

Bach: *Ich hatte viel Bekummernis.* Weber, Krebs, Schey, Steins, etc., under Lehmann. Archive ARC 3064. $5.98. An early Bach cantata, the longest and most elaborate of eight released in the sixth Archive production series. The singers and conductor are excellent, and so is the recording. **AA AA**

Bach: *Six English Suites.* Ralph Kirkpatrick (harpsichord). Archive ARC 3068/9/70. $5.98 each. Best performance and recording of this celebrated music that is available. **AA AA**

Bach: *Suites 3 and 4.* Concertgebouw Orchestra under van Beinum. Epic LC 3332. $3.98. Straightforward, clear performance of these pieces, consisting principally of dance forms. Well recorded. **AA AA**

Fauré: *Sonata* & **Franck:** *Sonata.* Lola Bobesco (violin), Jacques Genty (piano). London LL 1549. $3.98. Top sonatas of the French school, romantically played. The balance between instruments is excellent in performance and recording, in true chamber music style. While the violinist indulges in a slide here and there, a practice that is frowned on in some of today's conservatories, the over-all impression of the performance is distinctly favorable. **AA AA**

Mozart: *Requiem Mass* (K626). Royal Philharmonic Orchestra, Chorus, and Soloists under Beecham. Columbia ML 5160. $3.98. Solid, moving performance of a masterpiece. No tricks. Certainly deserves to be included in any mention of the best of 10 LP's. Robust recording. **AA AA**

Piston: *Symphony No. 6* & **Martinu:** *Fantaisies Symphoniques.* Boston Symphony under Munch. RCA Victor LM 2083. $3.98. Both symphonies were commissioned for the 75th anniversary season of the Bostonians and they were played often during last year's European tour. Both performance and recording are magnificent. **AA AA**

Rossini-Respighi: *La Boutique Fantasque* & **Piston:** *The Incredible Flutist* & **Ibert:** *Divertissement.* Boston Pops Orchestra under Fiedler. RCA Victor LM 2084. $3.98. High spirited ballet scores that are a delight to the ear. The orchestra tosses them off expertly, and it is superbly recorded. **AA AA**

Smetana: *The Bartered Bride.* Slovenian National Opera Company under Gebré. 6 sides, Epic 4SC 6020. $14.98. Charming folk-opera, like a superior operetta. Acceptable performance, though not distinguished, well recorded. Best performances: Yanez Lipushcheck as the stuttering Vasek and Vilma Bukovetz as the lovely Marenka. On the whole, Urania URLP 231 is better performed, though not as well recorded. **B A**

Strauss, J.: *Fledermaus Overture* and *Suite* and *1001 Nights* & **Strauss, Joseph:** *Music of the Spheres Waltz* and *Sword and Lyre Waltz.* Philadelphia Orchestra under Ormandy. Columbia ML 5166. $3.98. Top bracket light music, gloriously played and well recorded. **AA AA**

Stravinsky: *The Fairy's Kiss.* Cleveland Orchestra under the Composer. Columbia ML 5102. $3.98. The complete ballet. The music was inspired by the music of Tchaikovsky and it is written in the classical style. Definitive performance and very good recording. **AA AA**

Stravinsky: *Le Sacre du Printemps.* Paris Conservatoire Orchestra under Monteux. RCA Victor LM 2085. $3.98. Marvelous performance. Monteux conducted the world premiere in 1913. Dissonant music depicting prehistoric religious rituals. Wide-range recording that will test the capacity of any hi-fi set. For my taste, there's no better performance or recording of this work. **AA AA**

Verdi: *Aida.* Nelli, Gustavson, Tucker, Valdengo, etc., under Toscanini. 6 sides, RCA Victor LM 6132. $11.98. Recorded from the Studio 8H broadcast performances in 1949 plus some remakes in Carnegie Hall. The sound is passable, though variable. The show is Toscanini's, with the singers merely instruments in his hands. They don't respond to his touch too well. Yet, it's a phenomenal performance from many angles which should not be purchased in place of anything, but to supplement something. . . . Better recorded and well performed is the London LLA 13 set. **A B**

Verdi-Mackerras: *The Lady and the Fool.* Philharmonia Orchestra under Mackerras. RCA Victor LM 2039. $3.98. An innocuous ballet made up of tunes from rarely performed operas by Verdi. Handsomely played. Recording less brilliant than most, but it is rich and warm. **AA A**

Vaughan Williams: *Symphony No. 4.* Philharmonic-Symphony of N. Y. under Mitropoulos. Columbia ML 5158. $3.98. A 22-year-old British symphony that deserves more frequent hearing. Playing is deeply satisfying in power and quality. Robustly recorded. **AA AA**

Anton von Webern: *The Complete Music.* Robert Craft, conductor. Soloists and Ensembles. 8 sides, Columbia K 4L 232. $23.92. Webern was a Viennese atonal composer and lifelong disciple of Schönberg. He died in 1945. To bring out this unique album is certainly a labor of love and a great credit to Columbia. The performances are not always perfect, as Robert Craft points out in his notes, but they are certainly good. Singers and instrumentalists were selected from the Hollywood film studios. Chances are this album will show up as one of the "important" releases of the year. **A AA**

Organ Music of Spain and Portugal. E. Power Biggs. Columbia KL 5167. $5.98. Far cry from the music of Bach. Much closer to harpsichord and other clavier music. The organs of this region, including those in the six cities in which this concert was played, feature *trompeta real* and *trompa de batalha.* These are fan-like arrays with a pungent trumpet sound. Played well are the works of Pasquini, Seixas, Casanovas, Valente, and other rarely heard composers. Some muddying echo. **AA A**

Solisti Di Zagreb Play Vivaldi (orchestra and soloists). Vanguard BG 560. $4.98. An expert group of 13 strings plus woodwind soloists play six off-the-beaten-path works. Included are a concerto for bassoon and strings and two concerti for oboe and strings. **AA AA**

Under Western Skies. Rex Allen (baritone) with Victor Young and His Singing Strings. Decca DL 8402. $3.98. Western melodies pleasantly sung against a rather fancy string background. "Last Roundup," "Ole Faithful," "Sky Boss," "Too Lee Roll Um," etc. **AA AA**

24 All Time Favorite Waltzes. Lawrence Welk and His Champagne Music (orchestra). Coral CRL 57119. $3.98. Firm beat, for dancing. Included are "Charmaine," "Paradise," "My Dear," "Ramona," etc. Played with assurance by one of TV's major attractions. **AA AA**

TENNIS, ANYONE?

TESTING THE REBOUND OF TENNIS BALLS

The height of the rebound of tennis balls was observed on a graduated matt-surface screen strongly illuminated from behind. A slide projector was placed 26 feet behind the screen; the ball was held by vacuum, at the lower end of the pipe seen at the top of the picture, 100 inches above the concrete floor. The observer released the ball in an accurately reproducible manner by cutting off the vacuum. The bounce of the ball took place just behind the screen so that the highest point reached by its shadow could be accurately noted and recorded.

Which brand of tennis balls will you buy?

The U.S. Lawn Tennis Association requires a tennis ball to fall within specified minimum and maximum limits of diameter and weight, deformation under pressure, and rebound resilience.

Two important tennis ball qualities not included in the Tennis Association's requirements are tested by Consumers' Research wear resistance of the cover and decrease of rebound with time. These are two qualities which most tennis players want to know about, to determine how long the balls will last.

You will know which brands of tennis balls give the best value, and why, when you read the report on leading brands in the coming July Consumer Bulletin.

CONSUMER BULLETIN

57.50